Detail 1

## PROPERTY LINE, TAX ID# 13-1-46

**Zone AR-3; Required Setbacks: 100' Front**

Detail 2

## MODULE LAYOUT

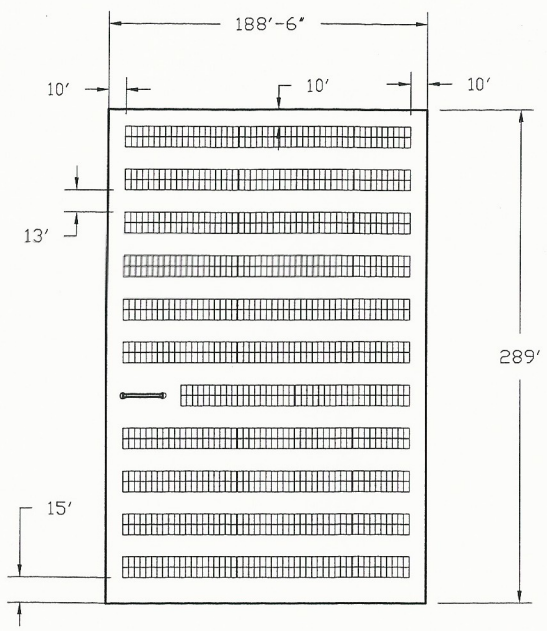


Detail 3

## MODULE MOUNTING

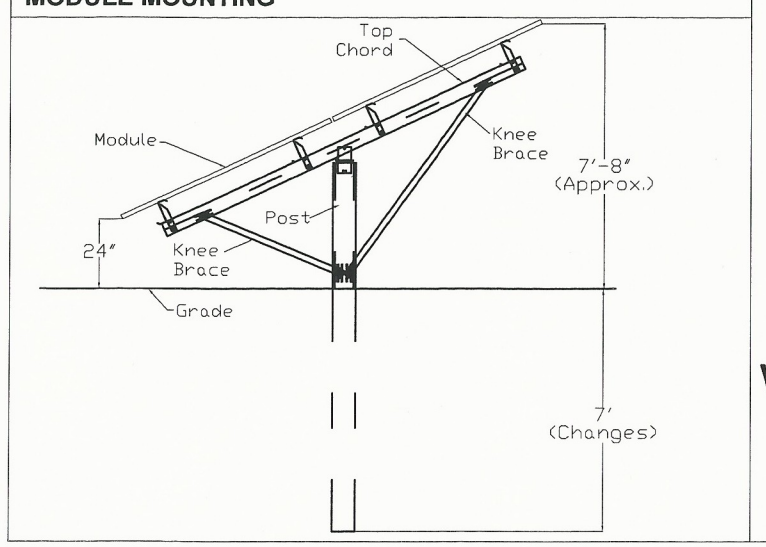


Detail 4

## PHOTOVOLTAIC (SOLAR ELECTRIC) SITE PLAN

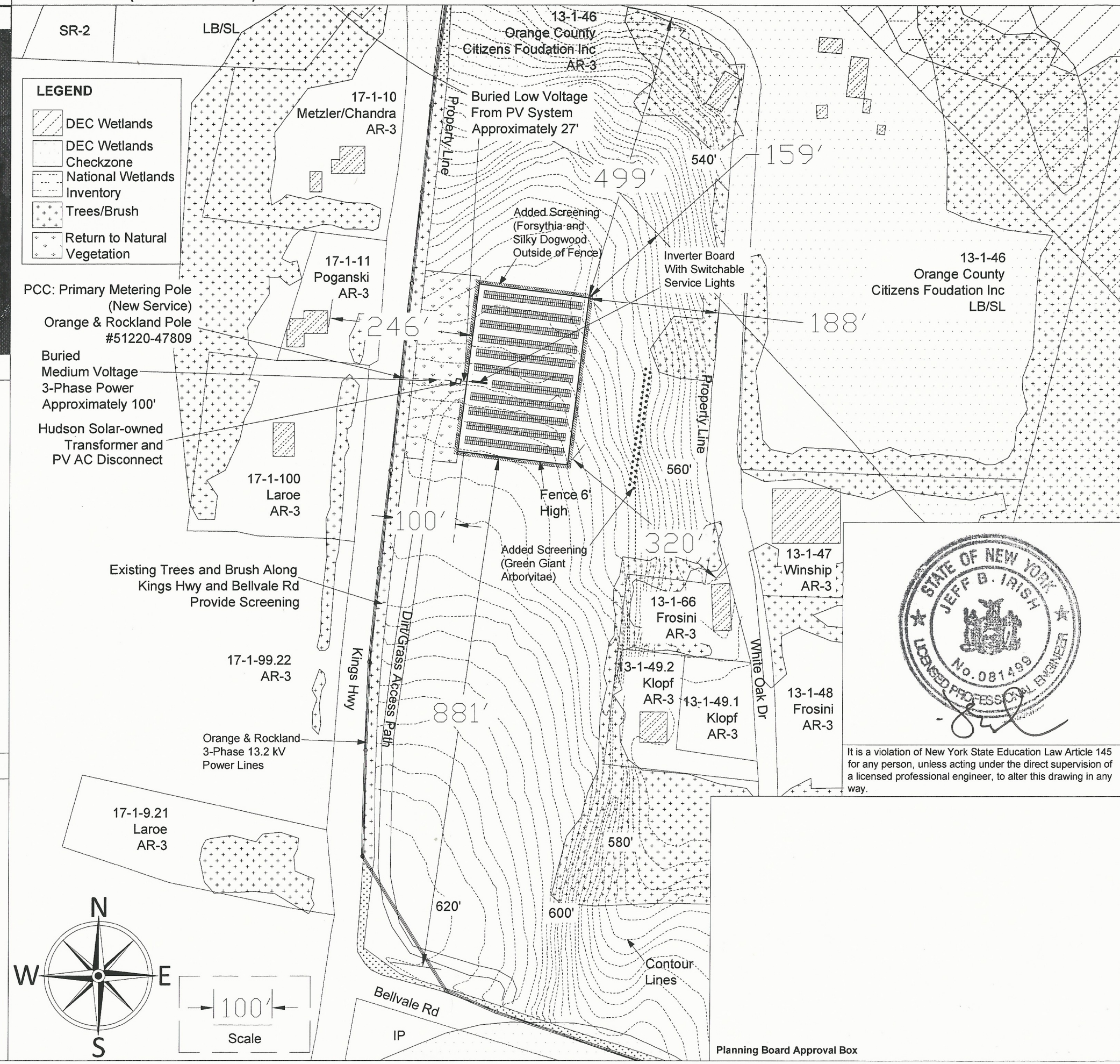


STATE OF NEW YORK
JEFF B. IRISH
No. 081499
LICENSED PROFESSIONAL ENGINEER

It is a violation of New York State Education Law Article 145 for any person, unless acting under the direct supervision of a licensed professional engineer, to alter this drawing in any way.

Planning Board Approval Box

HUDSON SOLAR CONFIDENTIAL & PROPRIETARY

**HUDSON SOLAR**

13 Hook Road, Rhinebeck NY 12572 www.hudsonsolar.com

Project
**OCCF Community DG**

Location
**23-26 White Oak Dr**
**Chester, NY 10918**
**Orange County**
**Town of Chester**

System Details
**Preliminary Site Map - 388,800WpDC; 299,700WAC**

Array Area Dimensions
- N-S (Fenced Area): 289'
- E-W (Fenced Area): 188.5'
- Enclosed Area: 1.25 acres
- Perimeter: 955'

Equipment Notes
- (1080) LG360S2W-A5 Modules
- (540) SolarEdge P730 Optimizers
- (9) SolarEdge SE33.3kUS Inverters

Racking Notes
- 25° Racking Tilt
- 188° Azimuth
- 13' Inter-row Spacing

Array Notes
- 479,346 kWh Annual Estimated Energy Production
- 1.23 kWh/Wp

Disturbed Earth (approx. $ft^2$)
Access Rd Extension: N/A
Transformer: 48
AC (Utility) Trench/Pole: 200
AC (PV) Trench: 60
DC Trench: 580
PV Equipment: 5
Array Perimeter Fence Posts: 32
Array Racking Posts: 111
Screening Trees/Plants: 3102
TOTAL= 0.09 acres = 4138 $ft^2$

Lot Coverage
54.4 acre lot

| Structure | $ft^2$ | acres | % |
|---|---|---|---|
| Offices | 5,996 | 0.138 | |
| Solar System | 22,136 | 0.508 | |
| TOTALS: | 28,132 | 0.646 | 1.19 |

**SHEET 1 of 1**

| Revision | Drafter | Date |
|---|---|---|
| A | JL | 110316 |
| B | JL | 020817 |
| C | JL | 022717 |
| D | JL | 032217 |
| E | JL | 040417 |
| F | JL | 042617 |
| G | JL | 052417 |
| H | JL | 060717 |
| I | JL | 061417 |
| J | JL | 071817 |
| | | |
| | | |