JOHNSON FARM PHOTOVOLTAIC ARRAY

121 JOHNSON ROAD
TOWN OF CHESTER, 10918
COUNTY OF ORANGE
STATE OF NEW YORK

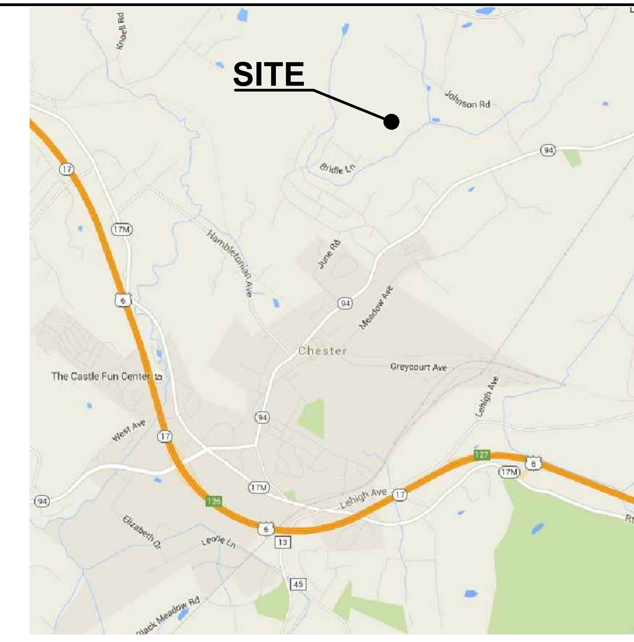

VICINITY MAP
1"=3000' ±

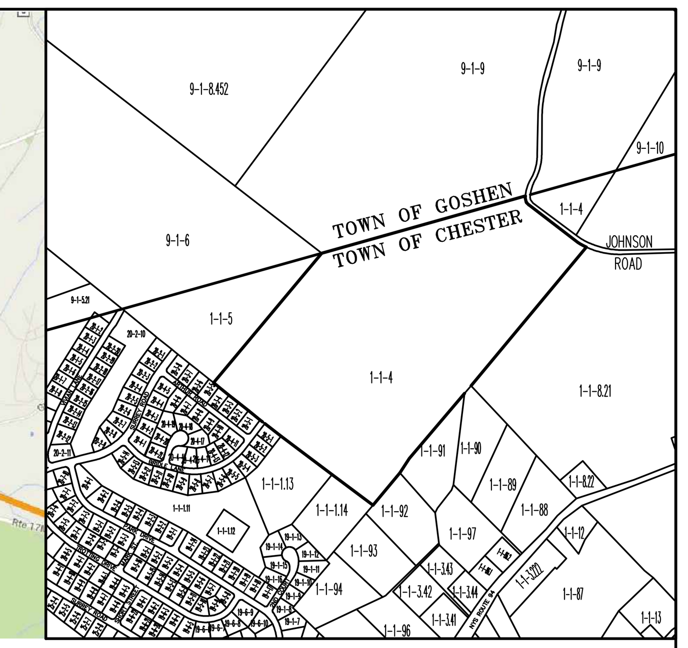

TAX MAP
1"=1000'

BULK REQUIREMENTS
TOWN OF CHESTER
AR–3 DISTRICT
(UTILITY STRUCTURE USE)

BULK TABLE REQUIREMENTS

BULK ITEM		MINIMUM REQUIRED REQUIRED	PROVIDED	VARIANCE
LOT AREA	(AC)	*	83.80	–
LOT WIDTH	(FT)	*	1580±	–
LOT DEPTH	(FT)	*	2650±	–
FRONT SETBACK	(FT)	*	–	–
REAR SETBACK	(FT)	*	–	–
ONE SIDE	(FT)	*	–	–
BOTH SIDES	(FT)	*	–	–
FLOOR AREA	(FT)	*	–	–

BULK ITEM		MAXIMUM PERMITTED PERMITTED	PROVIDED	VARIANCE
BUILDING COVERAGE	(%)	*	–	–
BUILDING HEIGHT	(FT)	*	–	–

* AS REQUIRED BY THE APPROPRIATE REGULATORY AGENCY

PROPERTY ADDRESS
121 JOHNSON ROAD
CHESTER, NEW YORK 10918

TAX MAP
SECTION 1, BLOCK 1, LOT 4

OWNER
JOHNSON REALTY
112 JOHNSON ROAD
CHESTER, NEW YORK 10918

DEVELOPER
SIEMENS INDUSTRY, INC
8 FERNWOOD ROAD
FLORHAM PARK, NEW JERSEY 07932

EXISTING USE
COMMERCIAL AGRICULTURAL OPERATION

PROPOSED USE
COMMERCIAL AGRICULTURAL OPERATION &
PUBLIC UTILITY STRUCTURES

1 SITE PLAN
1"=150'±

SOLAR ARRAY AREA = 10.48 ACRES

SCHEDULE OF DRAWINGS:

SHEET NO.	DRAWING NO.	TITLE
1	C–101	SITE PLAN
2	C–102	EXTENDED TOPOGRAPHY MAP
3	C–901	DETAILS
4	C–902	DETAILS
5	C–903	DETAILS

REV #	DATE	REMARKS:	ISSUE #	DATE	ISSUED FOR:

⅛" ¼" ½" 0 1" 2"
REFERENCE SCALE

UNAUTHORIZED ALTERATION OR ADDITION TO A PLAN BEARING A LICENSED PROFESSIONAL ENGINEER'S SEAL IS A VIOLATION OF SECTION 7209, SUB–DIVISION 2 OF THE N.Y. STATE EDUCATION LAW.

FELLENZER ENGINEERING LLP
www.fellp.com

22 Mulberry St., Suite 2A,
Middletown, NY 10940
t 845-343-1481 fx 845-343-4986

181 Church St., Suite 100,
Poughkeepsie, NY 12601
t 845-454-9704 fx 855-320-8735

TOWN OF CHESTER PLANNING BOARD APPROVAL

STAMP:
PROGRESS PRINT
1 / 05 / 16
NOT FOR CONSTRUCTION

PROJECT TITLE:
JOHNSON FARM
PHOTOVOLTAIC ARRAY
121 JOHNSON ROAD, CHESTER, NY 10918

DRAWING TITLE:
SITE PLAN

DESIGNED BY:	DRAWN BY:	APPROVED BY PM:	APPROVED BY PIC:	DRAWING #:
RDF	SAR	ACL	MDF	C-101
DATE: 09/15/15	SCALE: AS SHOWN	FE PROJECT #: 15–255		PAGE 1 OF 5

File Name: C:\Users\sar\appdata\local\temp\AcPublish_2948\C-101.dwg (Layout: C-101)
Date: Tue, Jan 05, 2016 - 4:09 PM (Name: sar)

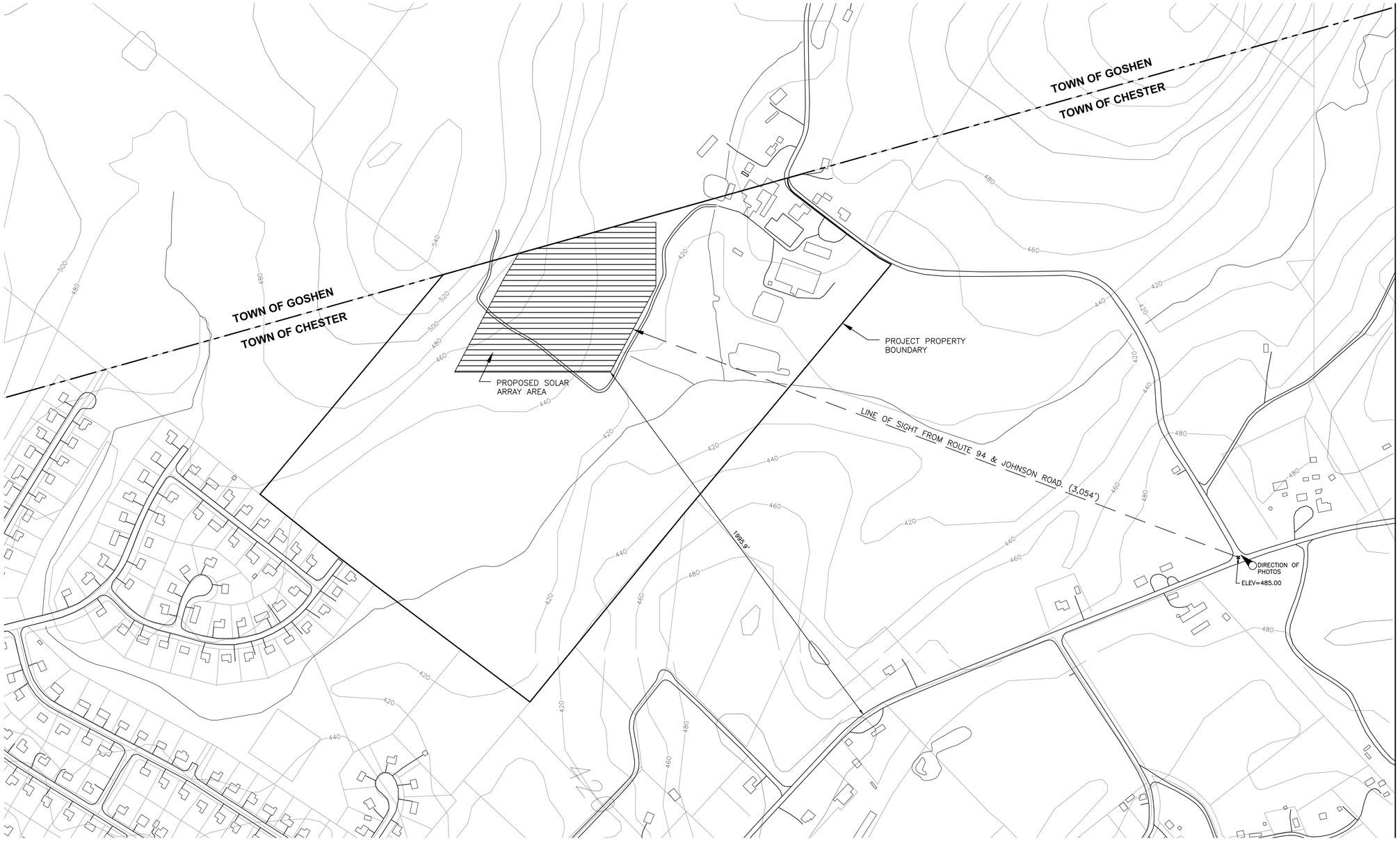

1 **EXTENDED TOPOGRAPHY MAP**
1"=200' ±

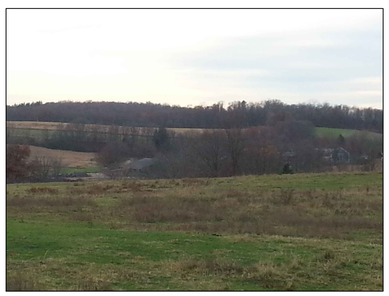

ZOOM 2

ZOOM 1

PHOTO

TOWN OF CHESTER PLANNING BOARD APPROVAL

REV #	DATE	REMARKS:	ISSUE #	DATE	ISSUED FOR:

⅛" ¼" ½" 0 1" 2"
REFERENCE SCALE

UNAUTHORIZED ALTERATION OR ADDITION TO A PLAN BEARING A LICENSED PROFESSIONAL ENGINEER'S SEAL IS A VIOLATION OF SECTION 7209, SUB-DIVISION 2 OF THE N.Y. STATE EDUCATION LAW.

FELLENZER ENGINEERING LLP
www.fellp.com
22 Mulberry St., Suite 2A,
Middletown, NY 10940
t 845-343-1481 fx 845-343-4986
181 Church St., Suite 100,
Poughkeepsie, NY 12601
t 845-454-9704 fx 855-320-8735

STAMP:
PROGRESS PRINT 1 / 05 / 16 NOT FOR CONSTRUCTION

PROJECT TITLE:
JOHNSON FARM
PHOTOVOLTAIC ARRAY
121 JOHNSON ROAD, CHESTER, NY 10918

DRAWING TITLE:
EXTENDED TOPOGRAPHY MAP

DESIGNED BY:	DRAWN BY:	APPROVED BY PM:	APPROVED BY PIC:	DRAWING #:
RDF	SAR	ACL	MDF	C-102
DATE: 09/15/15	SCALE: AS SHOWN		FE PROJECT #: 15-255	PAGE 2 OF 5

File Name: F:\2015\15-255 COLUMBIA SOLAR\Dwgs\C-102.dwg (Layout: C-103)
Date: Tue, Jan 05, 2016 - 4:09 PM (Name: akf)

NOTES

SILVANTIS® R-SERIES: 330 W TO 355 W

72-Cell High Wattage Modules

SunEdison

SunEdison introduces the next generation of high performance solar modules based on innovative Continuous Cz (CCz) monocrystalline cells with PERC technology. Best-in-class efficiency coupled with durability and superior design elements provide products with maximum long-term investment performance. At the same time the R-series minimizes cost incurred throughout the products lifecycle, such as installation expense and overall operation and maintenance.

SunEdison is a leader in utility-scale solar systems with over two and a half-million Silvantis modules deployed in some of the world's harshest climates and most remote locations. This experience, coupled with over 50 years of expertise in silicon technology and innovation enables SunEdison to design and produce highly advanced solar solutions.

SILVANTIS ADVANTAGE

- 18.2% module efficiency with positive power tolerance
- PID-free: multi-MPPT transformerless inverter compatible
- Based on SunEdison's proprietary CCz technology
- Higher return on investment with more watts-per-module
- Utility-grade manufacturing: ISO 14001, ISO 9001 and 100% EL inspection

QUALITY & SAFETY

- Industry leading PID test conditions:
  - » 96 hours, 85 C, 85% relative humidity, –1 kV
- IEC certified by TÜV SÜD:
  - » 61215 long-term operation in a variety of climates including snow loading up to 5400 Pa and hail testing
  - » 61730 to ensure electrical safety
  - » 61701 Level 1 salt mist corrosion resistant for marine regions
  - » 62716 ammonia testing for agricultural environments
- CSA listed to UL 1703 for 1,000 V systems in the US and Canada
- MCS certified by BABT for the UK
- Automotive grade TS 16949 & AQL Level II–0.4 manufacturing quality

ROBUST DESIGN

- Reliability tested beyond international standards
- Proven field performance in harsh environments

SUNEDISON WARRANTY

- 10-year limited warranty for materials and workmanship
- 25-year linear power warranty at STC:
  - » Year 1: ≤ 3.5% of rated power
  - » After year 1: ≤ 0.7% rated power degradation per year

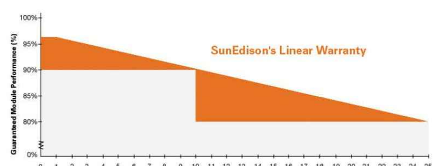

sunedison.com

SILVANTIS R-SERIES: 330 W TO 355 W

PHYSICAL PARAMETERS

Module Dimensions	1,976 mm x 990 mm x 50 mm
Module Weight	22 kg
Cell-Type	PERC on CCz monocrystalline
Number of Cells	72
Frame Material	Anodized aluminum alloy frame
Tempered ARC Glass Thickness	3.2 mm
Connector Types (indicated in model #)	Amphenol H4 (-39); Bizlink S418 (-35)

TEMPERATURE COEFFICIENTS AND PARAMETERS[1]

Nominal Operating Cell Temperature (NOCT)	45 C ± 2 C
Temperature Coefficient of Pmax	–0.44 %/C
Temperature Coefficient of Voc	–0.30 %/C
Temperature Coefficient of Isc	+0.04 %/C
Operating Temperature	–40 C to +85 C
Maximum System Voltage	1000 V (UL & IEC)
Limiting Reverse Current	9.10 A
Maximum Series Fuse Rating	15 A
Power Selection (Test v. Nameplate)	–0% to +3%
Junction Box Rating	IP67
Application Class	Class A
Packaging Specifications	20 modules per pallet 440 modules per 40' high-cube container
Wind and Snow Front Load	Up to 5,400 Pa
Wind Back Load	2,400 Pa
Reduction of STC efficiency from 1000 W/m² to 200 W/m² (Relative)	< 4%

STC ELECTRICAL CHARACTERISTICS[2]

Model #[3]	R330BzC	R335BzC	R340BzC	R345BzC	R350BzC	R355BzC
Rated Maximum Power Pmax (W)	330	335	340	345	350	355
Open-Circuit Voltage Voc (V)	46.2	46.4	46.5	46.6	46.7	46.8
Short-Circuit Current Isc (A)	9.28	9.29	9.40	9.48	9.56	9.64
Module Efficiency (%)	16.9	17.1	17.4	17.7	17.9	18.2
Maximum Power Point Voltage Vmpp (V)	37.7	37.9	38.0	38.1	38.2	38.3
Maximum Power Point Current Impp (A)	8.77	8.85	8.95	9.06	9.16	9.27

NOCT ELECTRICAL CHARACTERISTICS[4]

Model #[3]	R330BzC	R335BzC	R340BzC	R345BzC	R350BzC	R355BzC
Rated Maximum Power Pmax (W)	235.0	238.0	242.0	245.6	249.0	252.6
Open-Circuit Voltage Voc (V)	42.7	42.8	42.9	43.0	43.1	43.2
Short-Circuit Current Isc (A)	7.60	7.65	7.70	7.75	7.80	7.85
Maximum Power Point Voltage Vmpp (V)	33.4	33.6	33.8	34.0	34.2	34.4
Maximum Power Point Current Impp (A)	7.04	7.08	7.16	7.22	7.28	7.34

Listed specifications are subject to change without prior notice.

[1] *Temperature coefficients may vary by ±10%*

[2] *All electrical data at standard test conditions (STC): 1000 W/m², 25 C module temperature, AM 1.5; electrical characteristics may vary by ±5% and power by –0% to +3%.*

[3] *z indicates manufacturing location: M = Malaysia, X = Mexico, P = China, T = Taiwan*

[4] *Electrical characteristics measured under normal operating conditions of cells: 800/m², 20 C ambient temperature, AM 1.5, wind speed 1 m/s*

R-SERIES SOLAR MODULE DIMENSIONS mm [inch]

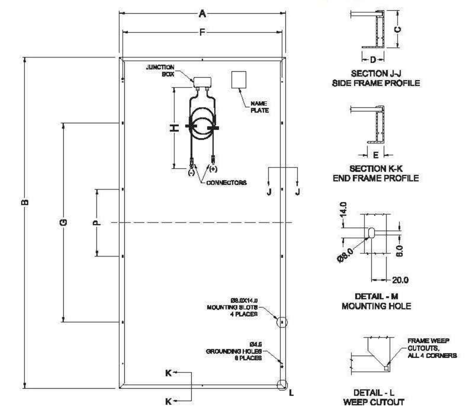

Module Dimensions
A – 990 [39.0] B – 1,976 [77.8] C – 50 [2.0] D – 30 [1.2] E – 22 [0.9]
Mounting Hole Spacing
F – 950 [37.4] G – 1,188 [46.8] P – 400 [15.7]
Cable Length
*H – 1,300 [51.2]
Junction Box Dimensions
101.5 x 60.0 x 25.5 [3.99 x 2.36 x 1.0]
**H – Other options available upon request; please contact your local sales representative for more information.*

IV CURVES AT MULTIPLE IRRADIANCES [25 C]

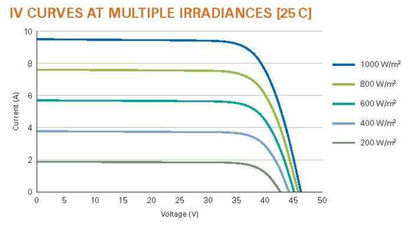

IV CURVES AT MULTIPLE TEMPERATURES [1000 W/m²]

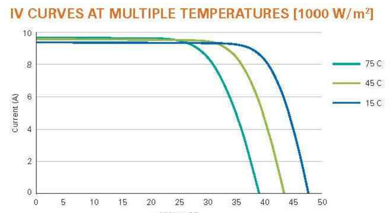

For more information about SunEdison's Silvantis modules, please visit www.sunedison.com

©2014 SunEdison Products Singapore Pte. Ltd.; A SunEdison Company. All rights reserved. SunEdison and the SunEdison logo are registered trademarks or trademarks of SunEdison Products Singapore Pte. Ltd. and/or its affiliates in the United States and certain other countries. All other trademarks mentioned in this document are the property of their respective owners.

LWI-19086 R72_DS_Vega_51_50mm_v13 09 2014

1 SOLAR MODULES
N.T.S.

GOVERNING CODE:

XXXX BUILDING CODE (XXX 200X)

DESIGN LOADS:

1. DEAD LOADS:
   - STRUCTURE: X.0 PSF
   - GLAZING: X.0 PSF
   - = X.0 PSF
2. ROOF LIVE LOAD = XX PSF
3. SNOW LOAD:
   - P_g = XX PSF (GROUND SNOW)
   - P_f = XX PSF (FLAT ROOF SNOW)
   - C_e = XX
   - C_t = XX
   - I_s = XX
4. WIND LOAD: (MAIN WIND FORCE RESISTING SYSTEM)
   - V = XX MPH
   - EXPOSURE: C
   - OCCUPANCY CATEGORY: X
   - I_w = XX
5. SEISMIC: S_s = 0.XXX S_{ds} = 0.XXX
   S_1 = 0.XXX S_{d1} = 0.XXX
   - OCCUPANCY CATEGORY: X
   - I_{se} = XX
   - SITE CLASS: D
   - DESIGN CATEGORY: X
   - SEISMIC FORCE RESISTING SYSTEM = BRACED FRAME
   - DESIGN BASE SHEAR: V = XX W, C_s = XX, R = XX
   - EQUIVALENT LATERAL FORCE ANALYSIS

CONSTRUCTION AND SAFETY:

1. ALL WORK SHALL CONFORM TO THE REQUIREMENTS OF THE APPLICABLE CONSTRUCTION CODE AND THE PROJECT SPECIFICATIONS.
2. ENGINEER SHALL NOT BE RESPONSIBLE FOR THE MEANS, METHODS, TECHNIQUES, SEQUENCES OR PROCEDURES OF CONSTRUCTION SELECTED BY CONTRACTOR.
3. CONTRACTOR SHALL FIELD MEASURE AND VERIFY ALL EXISTING CONDITIONS AND DIMENSIONS. ANY UNEXPECTED CONDITIONS OR DISCREPANCIES WITH THE DESIGN DOCUMENTS SHALL BE REPORTED TO THE ENGINEER PRIOR TO INSTALLATION OR ERECTION OF MATERIALS.
4. THE CONTRACTOR WILL BE SOLELY AND COMPLETELY RESPONSIBLE FOR CONDITIONS OF THE JOB SITE INCLUDING SAFETY OF ALL PERSONS AND PROPERTY DURING PERFORMANCE OF THE WORK. THIS REQUIREMENT WILL APPLY CONTINUOUSLY AND NOT BE LIMITED TO NORMAL WORKING HOURS. WHEN ON SITE, THE ENGINEER IS RESPONSIBLE FOR HIS OWN SAFETY BUT HAS NO RESPONSIBILITY FOR THE SAFETY OF OTHER PERSONNEL OR SAFETY CONDITION AT THE SITE.

SPECIAL FIELD INSPECTION:

1. ALL SPECIAL INSPECTORS SHALL BE RETAINED BY OWNER/CUSTOMER. THE EXTENT OF THE INSPECTION SHALL COMPLY WITH THE CONTRACT DOCUMENTS, THE BUILDING CODE REQUIREMENTS AND LOCAL JURISDICTION. IT IS THE OWNER/CUSTOMER'S RESPONSIBILITY TO GIVE PROPER NOTIFICATION TO THE SPECIAL INSPECTOR AND PROCEED WITH THE WORK ONLY AFTER THE SPECIAL INSPECTOR'S APPROVAL.
2. FAILURE TO NOTIFY THE SPECIAL INSPECTOR MAY RESULT IN OWNER/CUSTOMER HAVING TO REMOVE WORK FOR THE PURPOSE OF INSPECTION AT THE OWNER/CUSTOMER'S EXPENSE.
3. PREMATURE NOTIFICATION FOR INSPECTION WILL RESULT IN AN ADDITIONAL INSPECTION WITH ALL EXPENSES AND FEES PAID BY THE OWNER/CUSTOMER.
4. SPECIAL INSPECTORS SHALL KEEP RECORDS OF ALL INSPECTIONS. RECORDS SHALL BE FURNISHED TO THE OWNER, ENGINEER OF RECORD AND LOCAL JURISDICTION AS REQUIRED. ANY AND ALL DISCREPANCIES SHALL IMMEDIATELY BE BROUGHT TO THE ATTENTION OF THE CONTRACTOR. CORRECTIONS SHALL BE MADE AND AND A FINAL REPORT OF INSPECTIONS SHALL BE PROVIDED NOTING COMPLETION OF INSPECTIONS AND CORRECTIONS OF DISCREPANCIES. FAILURE TO CORRECT DISCREPANCIES SHALL BE REPORTED TO THE ENGINEER OF RECORD AND THE LOCAL JURISDICTION AND MAY RESULT IN REMOVAL OF COMPLETED WORK AND ADDITIONAL WORK TO CORRECT DISCREPANCIES AT THE CONTRACTOR'S EXPENSE.
5. MINIMUM REQUIRED INSPECTIONS:

5.1. STRUCTURAL STEEL/ALUMINUM

A. FABRICATION
   - MATERIAL IDENTIFICATION
   - HIGH STRENGTH BOLTS – MATERIAL IDENTIFICATION OF BOLTS, NUTS AND WASHERS
   - WELD FILLER MATERIALS – IDENTIFICATION AND CONFIRMATION OF COMPLIANCE WITH DESIGN DOCUMENTS

B. ERECTION
   - MATERIAL IDENTIFICATION
   - INSTALLATION OF HIGH STRENGTH BOLTS
   - WELDED CONNECTIONS
   - MEMBER SIZES AND PLACEMENT
   - GENERAL CONFORMANCE WITH DESIGN DOCUMENTS

5.1. CONCRETE CONSTRUCTION
   - MATERIAL IDENTIFICATION
   - MIX DESIGN VERIFICATION
   - SIZE AND PLACEMENT OF REINFORCING STEEL
   - PLACEMENT OF CONCRETE USING PROPER TECHNIQUES
   - CONCRETE SAMPLES FOR SLUMP, AIR CONTENT, TEMPERATURE, STRENGTH TESTS, ETC. IN ACCORDANCE WITH ACI 318
   - PROPER MAINTENANCE OF SPECIFIED CURING TEMPERATURE AND TECHNIQUES

5.1. FOUNDATIONS
   - SIZE AND LOCATION OF FOUNDATION EXCAVATIONS
   - PLACEMENT OF REINFORCING STEEL AS REQUIRED

STRUCTURAL STEEL:

1. ALL STRUCTURAL STEEL SHALL BE DESIGNED, FABRICATED AND ERECTED IN ACCORDANCE WITH THE LATEST VERSION OF AISC "MANUAL OF STEEL CONSTRUCTION." LIGHT GAGE COLD-FORMED SECTIONS SHALL CONFORM TO LATEST VERSION OF AISI SPECIFICATIONS FOR COLD-FORMED STEEL STRUCTURAL MEMBERS.
2. MATERIALS:
   - A. ROLLED SHAPES: ASTM A992 OR A572 GRADE 50, F_Y = 50 KSI MINIMUM
   - B. PLATES: ASTM A36
   - C. TUBULAR SHAPES: ASTM A500 GRADE B, F_Y = 50 KSI MINIMUM
   - D. FIELD BOLTS: (TYP. U.N.O) SAE J429 GRADE 5
   - E. SCREWS: SHEET METAL SCREWS, #8 & #10 TEKS – STAINLESS STEEL, #12 TEKS – GALVANIZED
3. FIELD CONNECTIONS SHALL BE BOLTED EXCEPT WHERE WELDED CONNECTIONS ARE INDICATED ON THE STRUCTURAL DRAWINGS. ALL BOLTED CONNECTIONS SHALL BE INSTALLED TO THE "SNUG TIGHT" CONDITION DEFINED AS THE FULL EFFORT OF A MAN USING A NORMAL SPUD WRENCH OR A FEW IMPACTS OF AN IMPACT WRENCH. THE "SNUG TIGHT" CONDITION WILL ENSURE THE PLIES OF CONNECTED MATERIAL ARE IN FIRM CONTACT.
4. ALL WELDING OF STEEL SHALL BE DONE IN ACCORDANCE WITH THE LATEST VERSION OF THE AMERICAN WELD SOCIETY'S SPECIFICATIONS – AWS D1.1. ELECTRODES SHALL BE E70 SERIES UNLESS NOTED OTHERWISE.
5. GALVANIZING SHALL BE PER CONTRACT DOCUMENTS.

ALUMINUM:

1. ALL STRUCTURAL ALUMINUM SHALL BE DESIGNED, FABRICATED AND ERECTED IN ACCORDANCE WITH THE LATEST VERSION OF THE SPECIFICATIONS AND GUIDELINES FOR ALUMINUM STRUCTURES.
2. MATERIALS:
   - A. ALUMINUM SHAPES: ALLOY 6063-T5, 6061-T6 & 6005-T6
   - B. ALUMINUM SHEET: ALLOY 5005-H34 & 5052-H32
   - C. FIELD BOLTS: (TYP. U.N.O.) ¼" AND LARGER – SAE J429 GRADE 5; 3/16" AND SMALLER – STAINLESS STEEL
   - D. SCREWS: SHEET METAL SCREWS, #8 & #10 TEKS – STAINLESS STEEL, #12 TEKS – GALVANIZED

MISCELLANEOUS FASTENER NOTES:

1. ALL BOLTS SHALL BE THE TYPE AND SIZE INDICATED ON DRAWINGS. ALL HOLES SHALL BE BOLT DIAMETER + 1/16" MAX.

WORK BY OTHERS:

1. SITE WORK AND DEVELOPMENT.
2. ALL ELECTRICAL WORK INCLUDING WIRING, CONDUIT, PANELS AND LIGHTS TO BE FURNISHED AND INSTALLED BY ELECTRICAL CONTRACTOR.
3. GROUNDING REQUIREMENTS.

FOUNDATION/CONCRETE NOTES:

1. SOIL CAPACITY:
   - A. BEARING CAPACITY: X PSF
   - B. LATERAL BEARING CAPACITY: X PSF/FT
   - C. SKIN FRICTION: X PSF/FT

   THE ABOVE VALUES ARE ASSUMED VALUES OR BASED ON GEOTECHNICAL REPORT PREPARED BY X DATED: X.
2. OWNER/CUSTOMER/GENERAL CONTRACTOR IS RESPONSIBLE FOR VERIFYING SOIL CONDITIONS ARE CONSISTENT WITH FINDINGS INCLUDED IN GEOTECH REPORT. VARIATIONS IN SOIL CONDITIONS SHALL BE REPORTED TO GEOTECH ENGINEER AND ENGINEER OF RECORD. RESPONSIBLE FOR FOUNDATION DESIGN PRIOR TO INSTALLATION OF ANY FOUNDATION MATERIALS.
3. CONCRETE COMPRESSIVE STRENGTH FOR FOUNDATIONS SHALL BE 3000 PSI @ 28 DAYS.
4. DEFORMED BAR REINFORCEMENT SHALL BE ASTM A615 GRADE 60 (F_Y = 60 KSI)
5. INSTALLER/CONTRACTOR SHALL COORDINATE PLACEMENT OF FOUNDATIONS AND/OR ANCHOR BOLTS PER DESIGN DRAWINGS.

REV #	DATE	REMARKS:	ISSUE #	DATE	ISSUED FOR:

⅛" ¼" ½" 0 1" 2"
REFERENCE SCALE

UNAUTHORIZED ALTERATION OR ADDITION TO A PLAN BEARING A LICENSED PROFESSIONAL ENGINEER'S SEAL IS A VIOLATION OF SECTION 7209, SUB-DIVISION 2 OF THE N.Y. STATE EDUCATION LAW.

TOWN OF CHESTER PLANNING BOARD APPROVAL

FELLENZER ENGINEERING LLP
www.fellp.com
22 Mulberry St., Suite 2A, Middletown, NY 10940
t 845-343-1481 fx 845-343-4986
181 Church St., Suite 100, Poughkeepsie, NY 12601
t 845-454-9704 fx 855-320-8735

STAMP: PROGRESS PRINT 1 / 05 / 16 NOT FOR CONSTRUCTION

PROJECT TITLE: **JOHNSON FARM PHOTOVOLTAIC ARRAY**
121 JOHNSON ROAD, CHESTER, NY 10918

DRAWING TITLE: DETAILS

DESIGNED BY:	DRAWN BY:	APPROVED BY PM:	APPROVED BY PIC:	DRAWING #:
RDF	SAR	ACL	MDF	C-901
DATE: 09/15/15	SCALE: AS SHOWN	FE PROJECT #: 15-255		PAGE 3 OF 5

File Name: F:\2015\15-255 COLUMBIA SOLAR\Dwgs\C-901.dwg (Layout: C-901)
Date: Tue, Jan 05, 2016 - 4:10 PM (Name: sar)

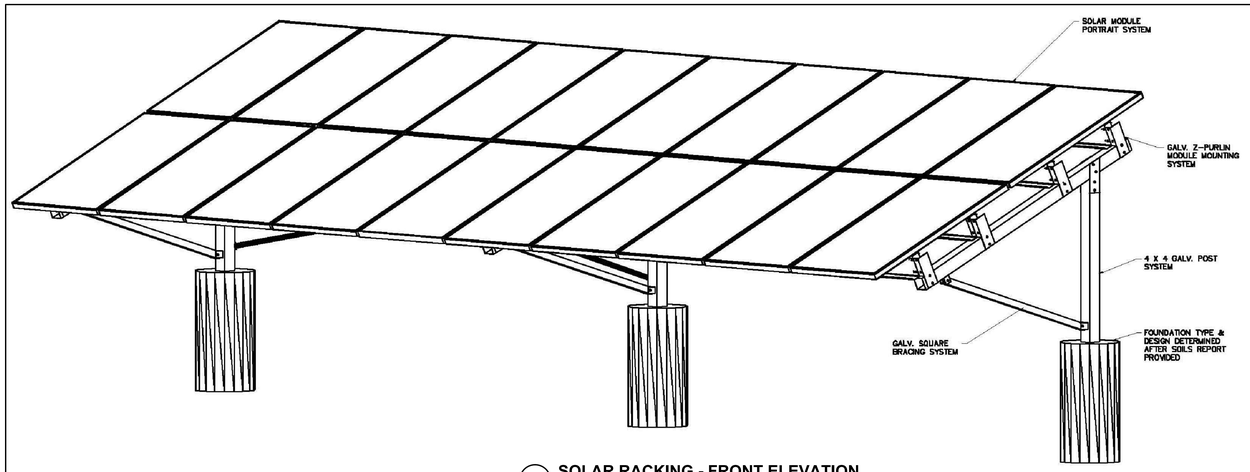

1 **SOLAR RACKING - FRONT ELEVATION**
N.T.S.

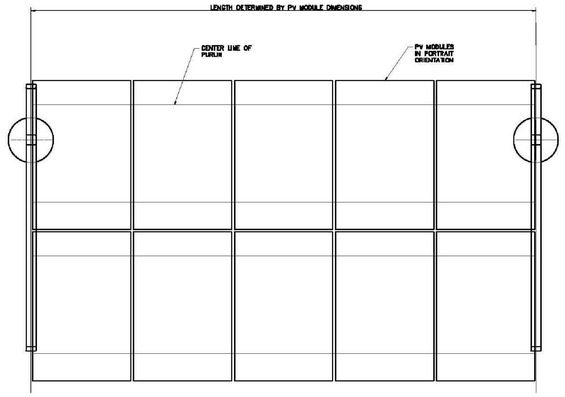

3 **SOLAR RACKING - PLAN VIEW**
N.T.S.

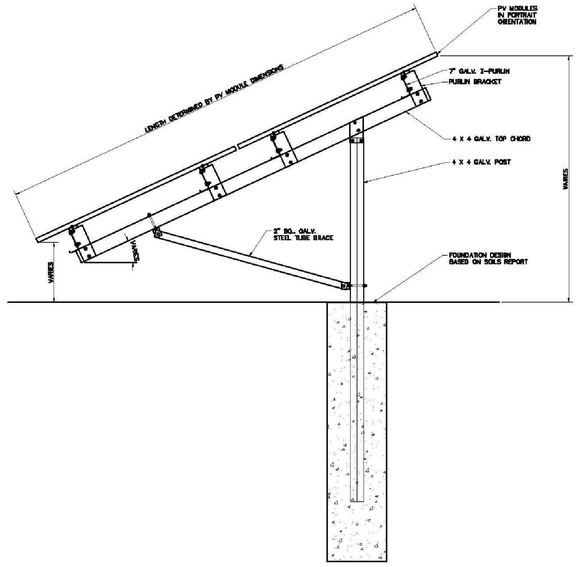

4 **SOLAR RACKING - SIDE ELEVATION**
N.T.S.

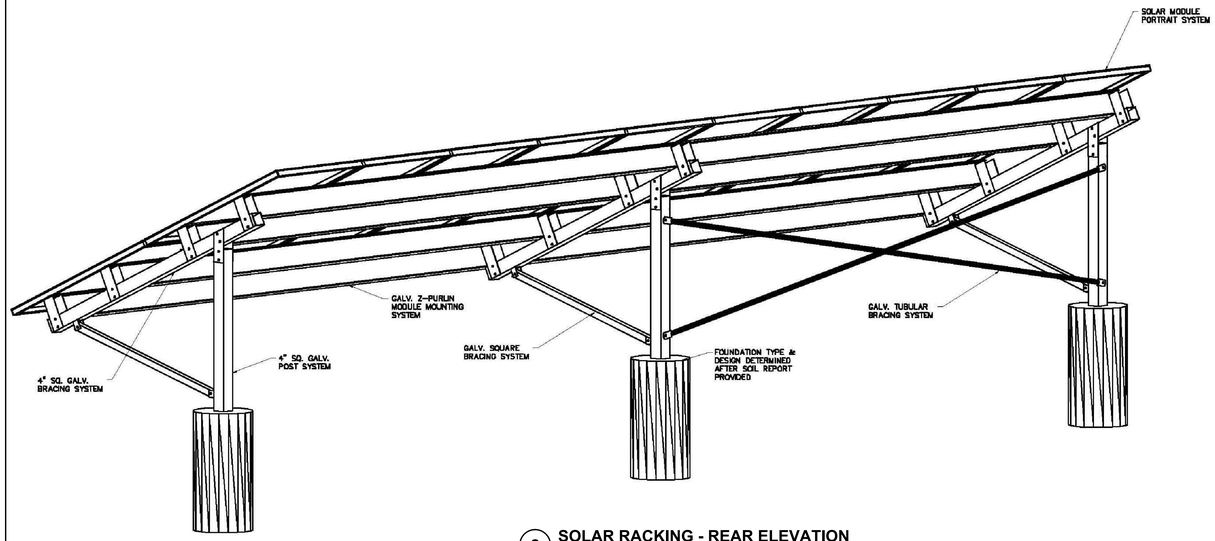

2 **SOLAR RACKING - REAR ELEVATION**
N.T.S.

REV #	DATE	REMARKS:	ISSUE #	DATE	ISSUED FOR:

⅛" ¼" ½" 0 1" 2"
REFERENCE SCALE

UNAUTHORIZED ALTERATION OR ADDITION TO A PLAN BEARING A LICENSED PROFESSIONAL ENGINEER'S SEAL IS A VIOLATION OF SECTION 7209, SUB-DIVISION 2 OF THE N.Y. STATE EDUCATION LAW.

FELLENZER ENGINEERING LLP
www.fellp.com
22 Mulberry St., Suite 2A,
Middletown, NY 10940
t 845-343-1481 fx 845-343-4986
181 Church St., Suite 100,
Poughkeepsie, NY 12601
t 845-454-9704 fx 855-320-8735

TOWN OF CHESTER PLANNING BOARD APPROVAL

STAMP:
PROGRESS PRINT 1/05/16 NOT FOR CONSTRUCTION

PROJECT TITLE:
JOHNSON FARM
PHOTOVOLTAIC ARRAY
121 JOHNSON ROAD, CHESTER, NY 10918

DRAWING TITLE:
DETAILS

DESIGNED BY:	DRAWN BY:	APPROVED BY PM:	APPROVED BY PIC:	DRAWING #:
RDF	SAR	ACL	MDF	C-902
DATE: 09/15/15	SCALE: AS SHOWN		FE PROJECT #: 15-255	PAGE 4 OF 5

File Name: F:\2015\15-255 COLUMBIA SOLAR\Dwgs\C-901.dwg (Layout: C-902)
Date/Time: Tue, Jan 05, 2016 - 4:10 PM (Name: sar)

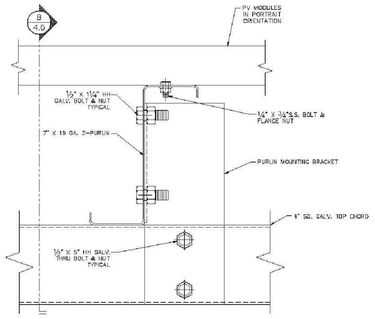

1 **PURLIN CONNECTION**
N.T.S.

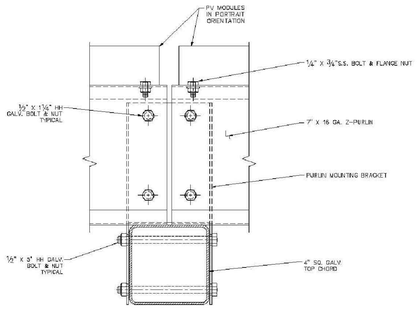

2 **PURLIN CONNECTION - SECTION**
N.T.S.

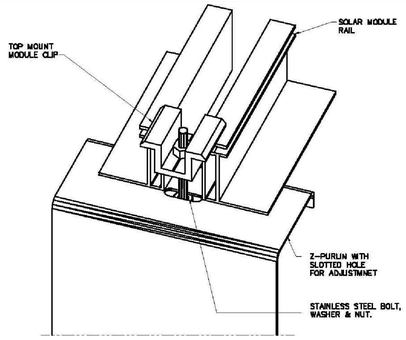

6 **TOP MODULE MOUNTING SYSTEM**
N.T.S.

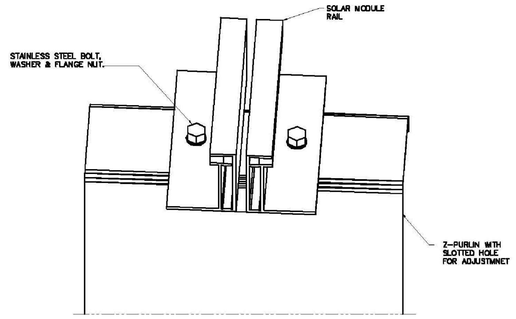

7 **BOTTOM MODULE MOUNTING SYSTEM**
N.T.S.

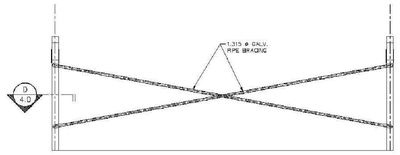

3 **BRACING DETAIL**
N.T.S.

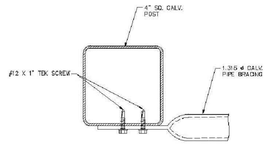

4 **BRACING DETAIL - SECTION**
N.T.S.

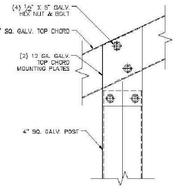

5 **TOP CHORD / POST CONNECTION**
N.T.S.

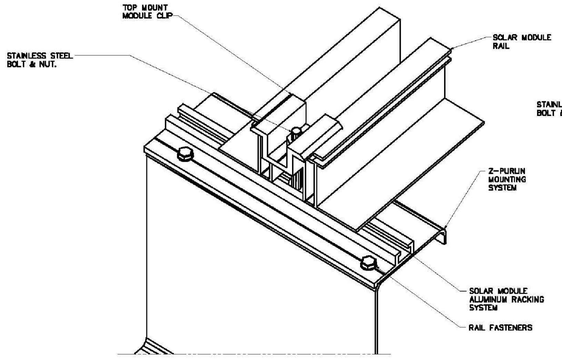

8 **TOP MODULE MOUNTING WITH RACKING SYSTEM**
N.T.S.

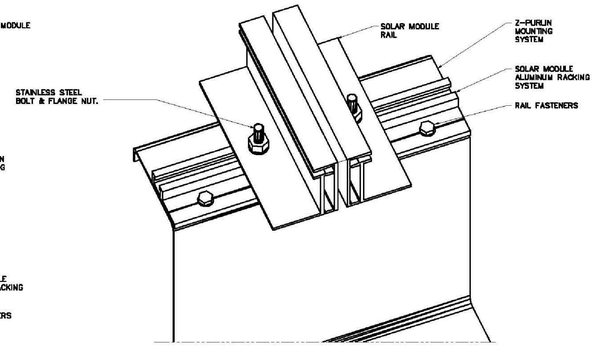

9 **BOTTOM MODULE MOUNTING WITH RACKING SYSTEM**
N.T.S.

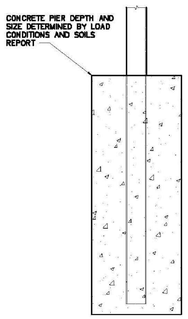

10 **TYP CONCRETE PIER**
N.T.S.

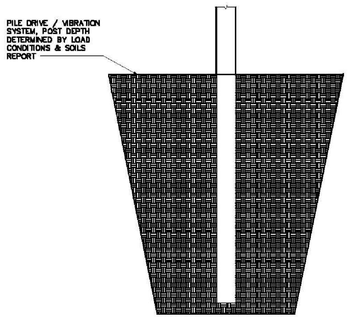

11 **PILE DRIVEN / VIBRATION SYSTEM PIER**
N.T.S.

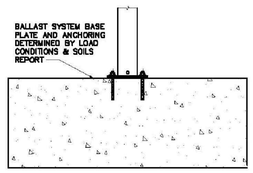

12 **CONCRETE BALLAST SYSTEM**
N.T.S.

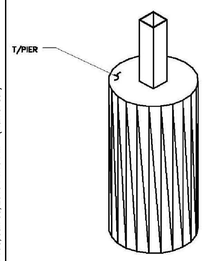

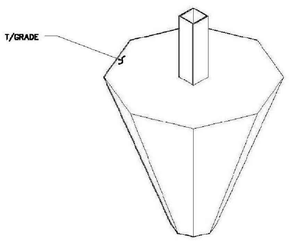

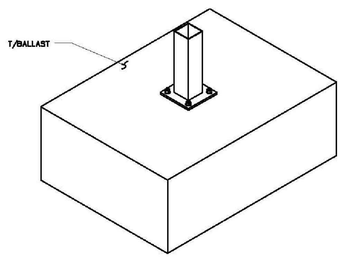

REV #	DATE	REMARKS:	ISSUE #	DATE	ISSUED FOR:

1/8" 1/4" 1/2" 0 1" 2"
REFERENCE SCALE

UNAUTHORIZED ALTERATION OR ADDITION TO A PLAN BEARING A LICENSED PROFESSIONAL ENGINEER'S SEAL IS A VIOLATION OF SECTION 7209, SUB-DIVISION 2 OF THE N.Y. STATE EDUCATION LAW.

FELLENZER
ENGINEERING LLP
www.fellp.com
22 Mulberry St., Suite 2A,
Middletown, NY 10940
t 845-343-1481 fx 845-343-4986
181 Church St., Suite 100,
Poughkeepsie, NY 12601
t 845-454-9704 fx 855-320-8735

TOWN OF CHESTER PLANNING BOARD APPROVAL

STAMP:
PROGRESS PRINT 1/05/16 NOT FOR CONSTRUCTION

PROJECT TITLE:
JOHNSON FARM
PHOTOVOLTAIC ARRAY
121 JOHNSON ROAD, CHESTER, NY 10918

DRAWING TITLE:
DETAILS

DESIGNED BY:	DRAWN BY:	APPROVED BY PM:	APPROVED BY PIC:	DRAWING #:
RDF	SAR	ACL	MDF	C-903
DATE: 09/15/15	SCALE: AS SHOWN		FE PROJECT #: 15-255	PAGE 5 OF 5

File Name: F:\2015\15-255 COLUMBIA SOLAR\Dwgs\C-901.dwg (Layout: C-903)
Date: Tue, Jan 05, 2016 - 4:10 PM (Name: sar)