Detail 1

PROPERTY LINE, TAX ID# 13-1-46

Zone AR-3; Required Setbacks: 100' Front

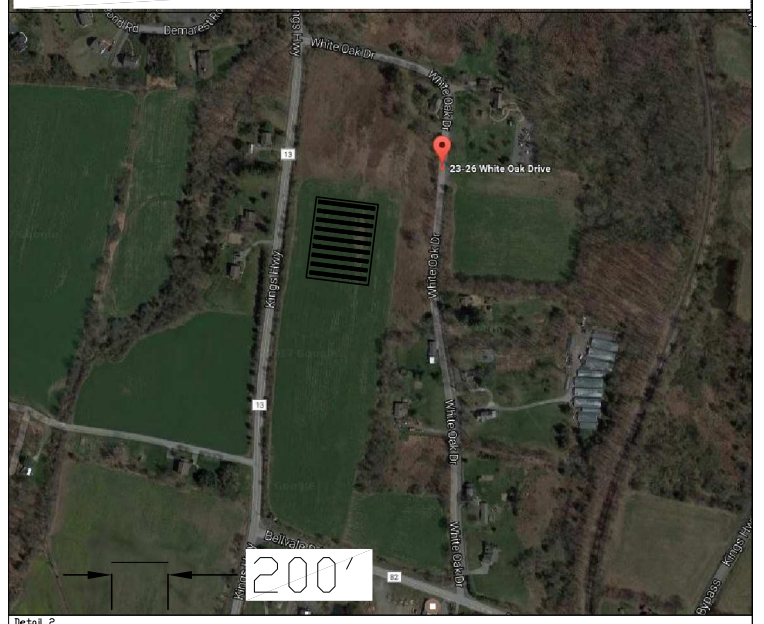

Detail 2

MODULE LAYOUT

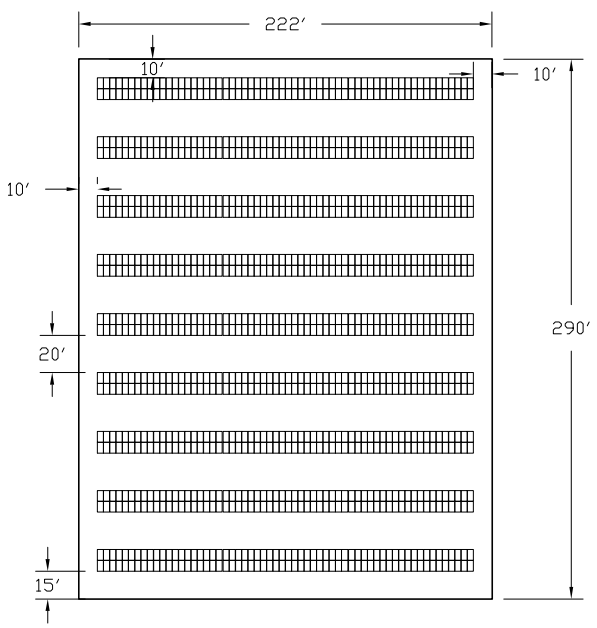

Detail 3

MODULE MOUNTING

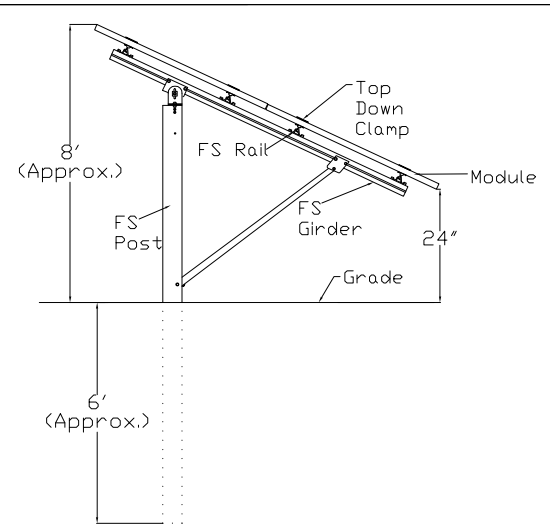

Detail 4

PHOTOVOLTAIC (SOLAR ELECTRIC) SITE PLAN

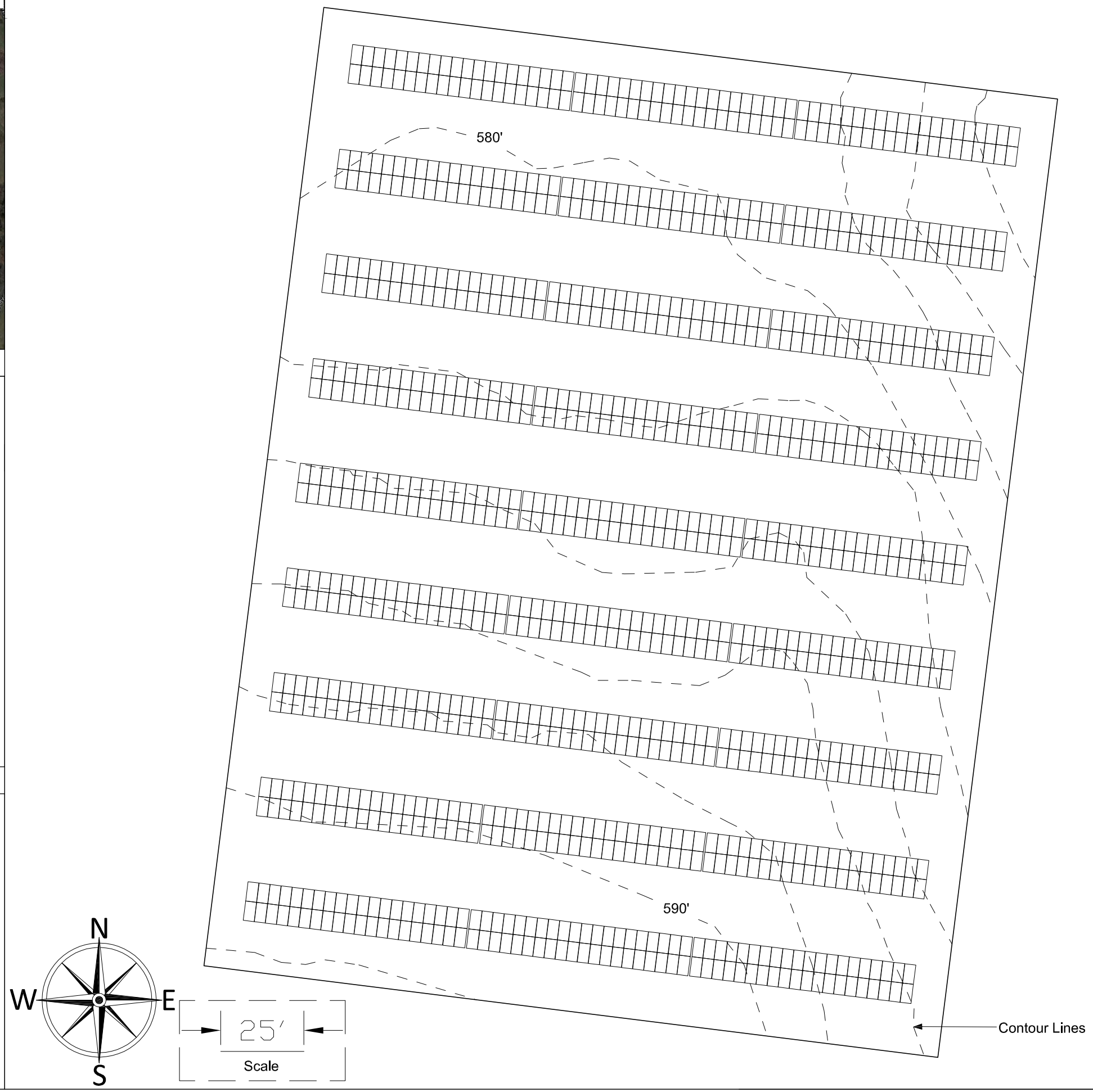

HUDSON SOLAR CONFIDENTIAL & PROPRIETARY

HUDSON SOLAR

13 Hook Road, Rhinebeck NY 12572 www.hudsonsolar.com

Project
OCCF Community DG

Location
23-26 White Oak Dr
Chester, NY 10918
Orange County
Town of Chester

System Details
Array Area Topography - 388,800WpDC; 299,700WAC

Array Area Dimensions
- N-S (Fenced Area): 290'
- E-W (Fenced Area): 222'
- Enclosed Area: 1.48 acres
- Perimeter: 1024'

Equipment Notes
- (1080) LG 360W, Q-Cell 360W or Equivalent
- (540) SolarEdge P730 Optimizers
- (9) SolarEdge SE33.3kUS Inverters

Racking Notes
- 25° Racking Tilt
- 188° Azimuth
- 20' Inter-row Spacing

Array Notes
- 497,061 kWh Annual Estimated Energy Production
- 1.28 kWh/Wp

Disturbed Earth (approx. ft^2)
Access Rd Extension: N/A
Transformer: 48
AC (Utility) Trench/Pole: 200
AC (PV) Trench: 80
DC Trench: 580
PV Equipment: 5
Array Perimeter Fence Posts: 34
Array Racking Posts: 162
Screening Trees: N/A
TOTAL= 0.03 acres = 1109 ft^2

Lot Coverage

54.4 acre lot

Structure	ft^2	acres	%
Offices	5,996	0.138	
Solar System	21,222	0.487	
TOTALS:	27,218	0.625	1.15

SHEET 1 of 1

Revision	Drafter	Date
A	JL	050417