Detail 1

PROPERTY LINE, TAX ID# 13-1-46

Zone AR-3; Required Setbacks: 100' Front

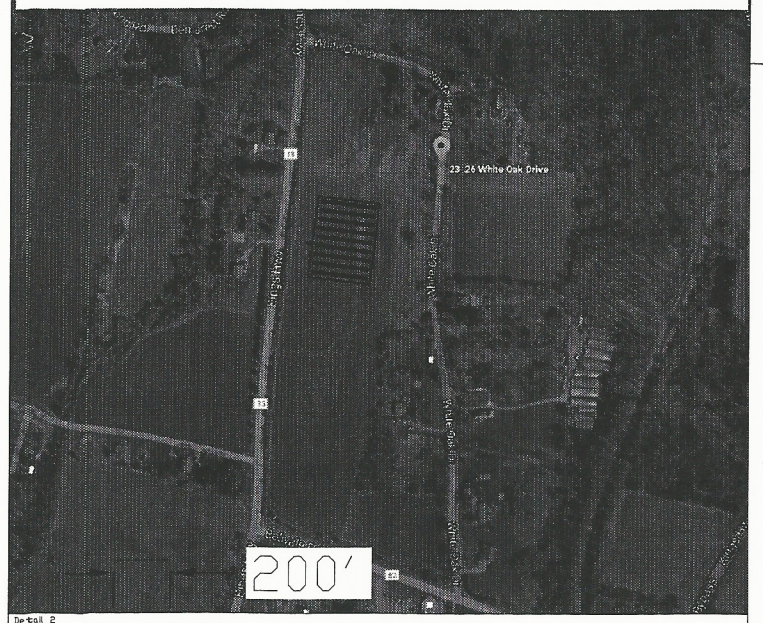

Detail 2

MODULE LAYOUT

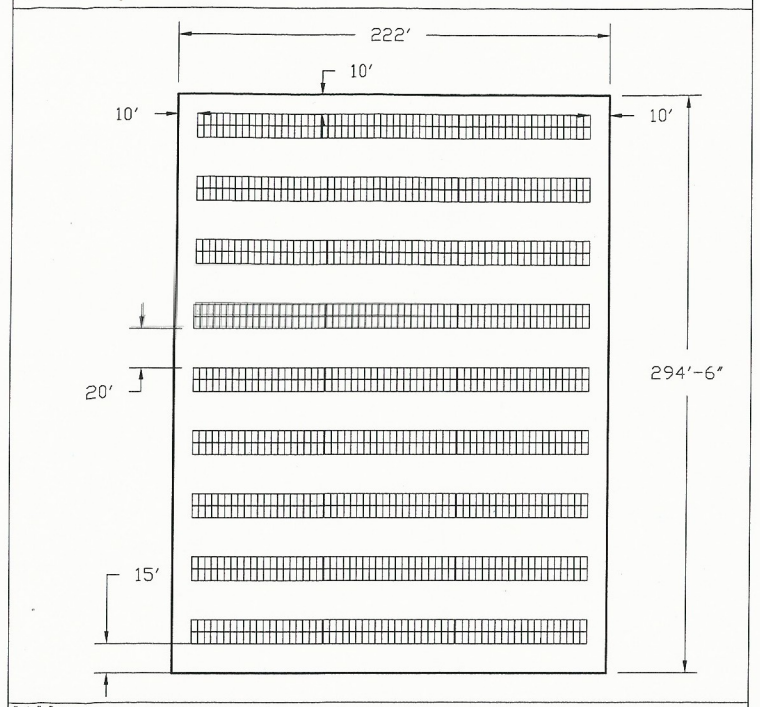

Detail 3

MODULE MOUNTING

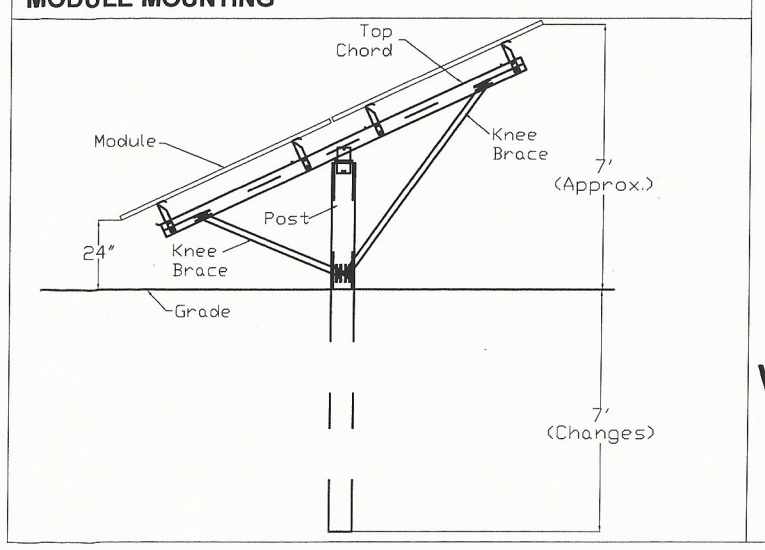

Detail 4

PHOTOVOLTAIC (SOLAR ELECTRIC) SITE PLAN

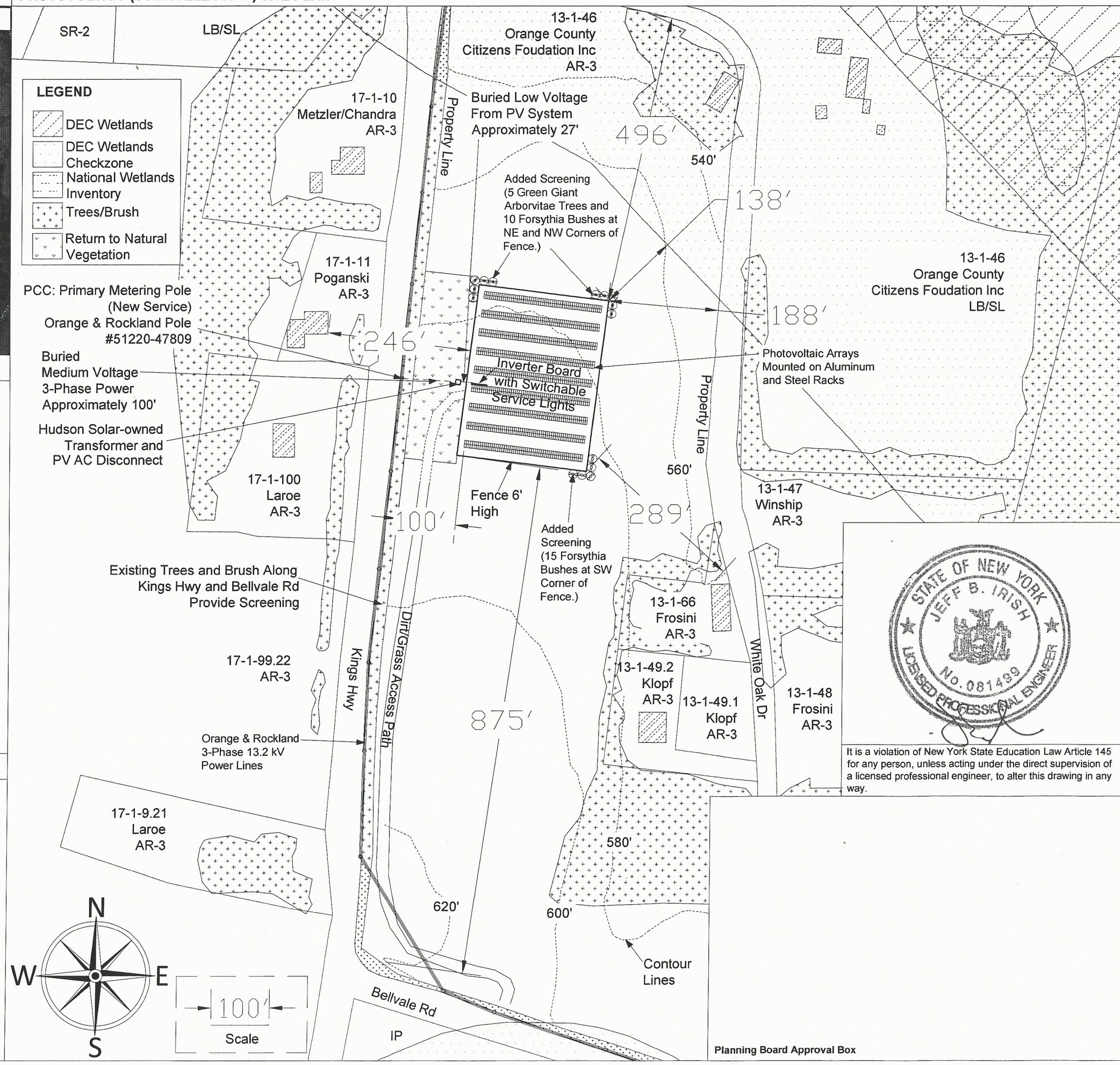

It is a violation of New York State Education Law Article 145 for any person, unless acting under the direct supervision of a licensed professional engineer, to alter this drawing in any way.

Planning Board Approval Box

HUDSON SOLAR CONFIDENTIAL & PROPRIETARY

HUDSON SOLAR

13 Hook Road, Rhinebeck NY 12572 www.hudsonsolar.com

Project
OCCF Community DG

Location
23-26 White Oak Dr
Chester, NY 10918
Orange County
Town of Chester

System Details
Preliminary Site Map - 388,800WpDC; 299,700WAC

Array Area Dimensions
- N-S (Fenced Area): 294.5'
- E-W (Fenced Area): 222'
- Enclosed Area: 1.5 acres
- Perimeter: 1033'

Equipment Notes
- (1080) LG360S2W-A5 Modules
- (540) SolarEdge P730 Optimizers
- (9) SolarEdge SE33.3kUS Inverters

Racking Notes
- 25° Racking Tilt
- 188° Azimuth
- 20' Inter-row Spacing

Array Notes
- 497,061 kWh Annual Estimated Energy Production
- 1.28 kWh/Wp

Disturbed Earth (approx. ft^2)
Access Rd Extension: N/A
Transformer: 48
AC (Utility) Trench/Pole: 200
AC (PV) Trench: 80
DC Trench: 580
PV Equipment: 5
Array Perimeter Fence Posts: 34
Array Racking Posts: 162
Screening Trees: N/A
TOTAL= 0.03 acres = 1109 ft^2

Lot Coverage
54.4 acre lot

Structure	ft^2	acres	%
Offices	5,996	0.138	
Solar System	22,122	0.508	
TOTALS:	28,118	0.646	1.19

SHEET 1 of 1

Revision	Drafter	Date
A	JL	110316
B	JL	020817
C	JL	022717
D	JL	032217
E	JL	040417
F	JL	042617
G	JL	052417