PRIMO SPORTS SITE PLAN

N.Y.S. ROUTE 94 & GLENMERE ROAD
TOWN OF CHESTER, 10918
COUNTY OF ORANGE
STATE OF NEW YORK

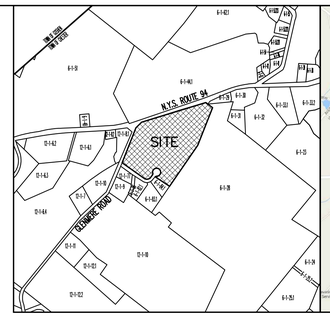

2 TAX MAP
1"=1000'

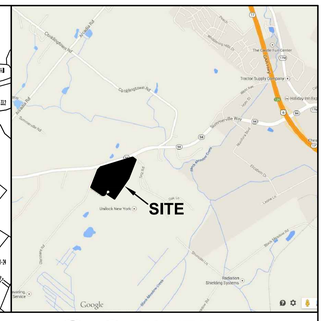

3 VICINITY MAP
1"=2000'

ZONING VARIANCE:

§98–39 SCHEDULE OF REGULATIONS

BULK TABLE #2 SR–1 DISTRICT (SUBURBAN RESIDENTIAL)

USES REQUIRING SITE PLAN APPROVAL:

(8.) ANNUAL MEMBERSHIP CLUBS PROVIDING OUTDOOR RECREATIONAL FACILITIES PER §98–29.

– AREA VARIANCE FOR 24.2 ACRES
(50 ACRE LOT MINIMUM REQUIRED, 25.8 ACRES PROVIDED)

*VARIANCE GRANTED AT 10/16/2014 ZBA MEETING
(SEE "RESOLUTIONS OF THE CHESTER ZONING BOARD OF APPEALS", SHEET C–000)

BULK REQUIREMENTS
TOWN OF CHESTER
SR–1 DISTRICT : SUBURBAN RESIDENTIAL

BULK TABLE REQUIREMENTS

MINIMUM REQUIRED

BULK ITEM		REQUIRED	PROVIDED	VARIANCE
LOT AREA	(AC)	50	25.8	24.2*
LOT WIDTH	(FT)	500	1300±	–
LOT DEPTH	(FT)	–	1100±	–
FRONT SETBACK	(FT)	100	171.7	–
REAR SETBACK	(FT)	150	470.1	–
ONE SIDE	(FT)	150	N/A	–
BOTH SIDES	(FT)	300	N/A	–
FLOOR AREA	(FT)	–	60,000	–

MAXIMUM PERMITTED

BULK ITEM		PERMITTED	PROVIDED	VARIANCE
BUILDING COVERAGE	(%)	10	5.34	–
BUILDING HEIGHT	(FT)	35	≤35	–

TAX MAP
TOWN OF CHESTER
NYS ROUTE 94 & GLENMERE RD.
SECTION 6, BLOCK 1, LOT 85.2
1,122,345 S.F., 25.77 ACRES

EXISTING USE
VACANT

PROPOSED USE
§98–29(A) –
ANNUAL MEMBERSHIP CLUBS PROVIDNG
OUTDOOR RECREATIONAL FACILITIES

OWNER
CHILL FACTOR COOLING LLC
145 BIG ISLAND ROAD
WARWICK, NY 10990

APPLICANT/DEVELOPER
ROUTE 94 NORTH LLC
PO BOX 242
FLORIDA, NY 10921

REFERENCE
SURVEY MAP, BEING LOT #4, FILED MAP #10076, DATED AUGUST 19, 2008, FIELD REVISED SEPTEMBER 12, 2014.
BY DANIEL J. O'BRIEN,
N.Y.S. LICENSE #049820–1

SCHEDULE OF DRAWINGS:

SHEET NO.	DRAWING NO.	TITLE
1	TS	TITLE SHEET
2	C–000	LEGENDS & NOTES
3	C–001	EXISTING CONDITIONS SURVEY
4	C–002	EROSION & SEDIMENT CONTROL/DEMOLITION PLAN
5	C–101	SITE PLAN
6	C–301	GRADING PLAN
7	C–401	STORM WATER – DRAINAGE BASINS MAP
8	C–402	STORM WATER – DRAINAGE & DETENTION PLAN
9	C–501	SEPTIC PLAN
10	C–502	SEPTIC TEST DATA / DETAILS
11	C–601	SITE LIGHTING PLAN
12	C–602	ATHLETIC FIELD LIGHTING DETAILS
13	C–701	LANDSCAPING PLAN
14	C–901	DETAILS
15	C–902	DETAILS
16	C–903	DETAILS

REV #	DATE	REMARKS:	ISSUE #	DATE	ISSUED FOR:
			5	02/12/15	TO PLANNING BOARD
9	05/11/15	TO PLANNING BOARD	4	10/29/14	TO PLANNING BOARD
8	04/01/15	TO PLANNING BOARD	3	10/07/14	TO ZBA
7	03/13/15	TO ORANGE COUNTY PLANNING	2	7/10/14	TO PLANNING BOARD
6	03/09/15	TO NYSDOT, NYSDEC,	1	5/27/14	TO ZBA FOR VARIANCE

⅛" ¼" ½" 0 1" 2"
REFERENCE SCALE

Dig Safely. New York Call 811 before you dig

TOWN OF CHESTER PLANNING BOARD APPROVAL

UNAUTHORIZED ALTERATION OR ADDITION TO A PLAN BEARING A LICENSED PROFESSIONAL ENGINEER'S SEAL IS A VIOLATION OF SECTION 7209, SUB–DIVISION 2 OF THE N.Y. STATE EDUCATION LAW.

FELLENZER ENGINEERING LLP
www.fellp.com
22 Mulberry St., Suite 2A,
Middletown, NY 10940
t 845-343-1481 fx 845-343-4986
181 Church St., Suite 100,
Poughkeepsie, NY 12601
t 845-454-9704 fx 855-320-8735
MARK D. FELLENZER, P.E.
STATE OF NEW YORK · MARK DAVID FELLENZER · 049846 · LICENSED PROFESSIONAL ENGINEER
NY PROFESSIONAL ENGINEER NO. 049846–1

PROJECT TITLE:
PRIMO SPORTS COMPLEX
PRELIMINARY SITE PLAN
STATE ROUTE 94 CHESTER, NY 10918

DRAWING TITLE: TITLE SHEET

DESIGNED BY:	DRAWN BY:	APPROVED BY PM:	APPROVED BY PIC:	DRAWING #:
RDF	SAR	ACL	MDF	TS
DATE: 5/27/2014	SCALE: AS SHOWN		FE PROJECT #: 14–159	PAGE 1 of 16

File Name: C:\Users\sarsgardd\AppData\Local\Temp\AcPublish_7840_TS.dwg (Layout: TS-1)
Date: Mon, Nov 16, 2015 - 7:23 AM (Name: sar)

SITE - EXISTING

N20°37'25"W	BEARING
	PROPERTY LINE
	ZONE LINE
	ADJOINER
	SETBACK LINE
+100.00	SPOT ELEVATION
100	CONTOUR (MAJOR)
101	CONTOUR (MINOR)
	PAVEMENT
EX. ST	STORM LINE
	CATCH BASIN
G	GAS LINE
OHE	OVERHEAD WIRES
	UTILITY POLE
	CHAINLINK FENCE
	TREELINE OR WOODED AREA
	TREE, DECIDUOUS
	TREE, EVERGREEN
BnC	SOIL TYPE LABEL SOIL BOUNDARY
	DRAINAGE SUBBASIN

SITE - PROPOSED

+100.00	SPOT ELEVATION
100	FINISHED CONTOUR
N	18' HIGH NETTING
	CHAIN LINK FENCE
	SILT SOCK
	CONCRETE FILLED BOLLARD
	STREET SIGN
	CONCRETE CURB
	CONCRETE SIDEWALK
ST	STORM WATER DRAIN
W	WATER LINE
SS	SANITARY SEWAGE LINE
UGE	UNDERGROUND ELECTRIC
	GUIDERAIL
	YARD BASIN
	CURB BASIN
	PARKING AREA LIGHT POLE
	SPORTS FIELD LIGHT POLE
	TREE, DECIDUOUS
	TREE, EVERGREEN
	LANDSCAPE GROUPING

GENERAL - SYMBOLS

	BENCHMARK
	DEMOLITION LINE
X	KEYNOTE INDICATOR

EROSION & SEDIMENT CONTROL NOTES:

1. THE CONTRACTOR SHALL ASSURE THAT AN EROSION AND SEDIMENT CONTROL PLAN HAS BEEN PREPARED, APPROVED BY THE TOWN OF CHESTER, AND IS BEING IMPLEMENTED AND MAINTAINED FOR ALL SOIL AND/OR ROCK SPOIL AND BORROW AREAS, REGARDLESS OF THEIR LOCATIONS.
2. A COPY OF THE APPROVED EROSION AND SEDIMENT CONTROL PLAN MUST BE AVAILABLE AT THE PROJECT SITE AT ALL TIMES.
3. THE E&S CONTROL PLAN MAPPING MUST DISPLAY A NY ONE CALL SYSTEM INCORPORATED SYMBOL INCLUDING THE SITE IDENTIFICATION NUMBER. (THIS IS A NUMBERED SYMBOL NOT A NOTE.)
4. THE CONTRACTOR SHALL ASSURE THAT THE APPROVED EROSION AND SEDIMENT CONTROL PLAN IS PROPERLY AND COMPLETELY IMPLEMENTED.
5. EROSION AND SEDIMENT BMPS (BEST MANAGEMENT PRACTICES) MUST BE CONSTRUCTED, STABILIZED, AND FUNCTIONAL BEFORE SITE DISTURBANCE BEGINS WITHIN THE TRIBUTARY AREAS OF THOSE BMPS.
6. UNTIL THE SITE ACHIEVES FINAL STABILIZATION, THE CONTRACTOR SHALL ASSURE THAT THE BEST MANAGEMENT PRACTICES ARE IMPLEMENTED, OPERATED, AND MAINTAINED PROPERLY AND COMPLETELY. MAINTENANCE SHALL INCLUDE INSPECTIONS OF ALL BEST MANAGEMENT PRACTICE FACILITIES. THE OPERATOR WILL MAINTAIN AND MAKE AVAILABLE TO ALL AGENCIES AND MUNICIPALITIES HAVING JURISDICTION, COMPLETE, WRITTEN INSPECTION LOGS OF ALL THOSE INSPECTIONS. ALL MAINTENANCE WORK, INCLUDING CLEANING, REPAIR, REPLACEMENT, RE-GRADING, AND RE-STABILIZATION SHALL BE PERFORMED IMMEDIATELY.
7. IMMEDIATELY UPON DISCOVERING UNFORESEEN CIRCUMSTANCES POSING THE POTENTIAL FOR ACCELERATED EROSION AND/OR SEDIMENT POLLUTION, THE CONTRACTOR SHALL IMPLEMENT APPROPRIATE BEST MANAGEMENT PRACTICES TO ELIMINATE POTENTIAL FOR ACCELERATED EROSION AND/OR SEDIMENT POLLUTION.
8. IMMEDIATELY AFTER EARTH DISTURBANCE ACTIVITIES CEASE, THE CONTRACTOR SHALL STABILIZE WITH TEMPORARY SEEDING (SEE TEMPORARY SEEDING SCHEDULE, SHEET C-002) OR MULCHING, ANY AREAS DISTURBED BY THE ACTIVITIES. DURING NON-GERMINATING PERIODS, MULCH MUST BE APPLIED AT THE SPECIFIED RATES. DISTURBED AREAS WHICH ARE NOT AT FINISHED GRADE AND WHICH WILL BE REDISTURBED WITHIN 1 YEAR MUST BE STABILIZED IN ACCORDANCE WITH THE TEMPORARY VEGETATIVE STABILIZATION SPECIFICATIONS. DISTURBED AREAS WHICH ARE AT FINISHED GRADE OR WHICH WILL NOT BE REDISTURBED WITHIN 1 YEAR MUST BE STABILIZED IN ACCORDANCE WITH THE PERMANENT VEGETATIVE STABILIZATION SPECIFICATIONS.
9. BEFORE INITIATING ANY REVISIONS TO THE APPROVED EROSION AND SEDIMENT CONTROL PLAN OR REVISIONS TO OTHER PLANS THAT MAY AFFECT THE EFFECTIVENESS OF THE APPROVED E&S CONTROL PLAN, THE CONTRACTOR MUST RECEIVE APPROVAL OF THE REVISIONS FROM THE TOWN OF CHESTER PLANNING BOARD.
10. UNTIL THE SITE IS STABILIZED, ALL EROSION AND SEDIMENT BMPS MUST BE MAINTAINED PROPERLY. MAINTENANCE MUST INCLUDE INSPECTIONS OF ALL EROSION AND SEDIMENT CONTROL BMPS AFTER EACH RUNOFF EVENT AND ON A WEEKLY BASIS. ALL PREVENTATIVE AND REMEDIAL MAINTENANCE WORK, INCLUDING CLEAN OUT, REPAIR, REPLACEMENT, REGRADING, RESEEDING, REMULCHING, AND RENETTING, MUST BE PERFORMED IMMEDIATELY. IF EROSION AND SEDIMENT CONTROL BMPS FAIL TO PERFORM AS EXPECTED, REPLACEMENT BMPS, OR MODIFICATIONS OF THOSE INSTALLED WILL BE REQUIRED.
11. SEDIMENT REMOVED FROM BMPS SHALL BE DISPOSED OF IN LANDSCAPED AREAS OUTSIDE OF STEEP SLOPES, WETLANDS, FLOODPLAINS OR DRAINAGE SWALES AND IMMEDIATELY STABILIZED, OR PLACED IN TOPSOIL STOCKPILES.
12. THE CONTRACTOR SHALL REMOVE FROM THE SITE, RECYCLE, OR DISPOSE OF ALL BUILDING MATERIALS AND WASTES IN ACCORDANCE WITH ALL APPLICABLE STATE AND LOCAL CODES. THE CONTRACTOR SHALL NOT ILLEGALLY BURY, DUMP, OR DISCHARGE ANY BUILDING MATERIAL OR WASTES AT THE SITE.
13. CONSTRUCTION VEHICLES AND EQUIPMENT ENTERING AND EXITING THE SITE MUST USE THE STABILIZED CONSTRUCTION ENTRANCE LOCATION(S) ONLY. MEASURES MUST BE TAKEN TO PREVENT SOIL AND SEDIMENT FROM A VEHICLE'S TIRES FROM BEING DEPOSITED ONTO THE PUBLIC ROADS. ROADWAY SHALL BE CLEANED DAILY, OR MORE OFTEN TO INSURE SAFE ROADING.

BMPS – AFTER DISTURBANCE

1. WITHIN FOURTEEN (14) DAYS OF DISTURBANCE, WHEN FINAL SITE STABILIZATION HAS BEEN ACHIEVED, TEMPORARY EROSION AND SEDIMENT BMPS CONTROLS MUST BE REMOVED. AREAS DISTURBED DURING REMOVAL OF THE BMPS MUST BE STABILIZED IMMEDIATELY.
2. AN AREA SHALL BE CONSIDERED TO HAVE ACHIEVED FINAL STABILIZATION WHEN IT HAS A MINIMUM UNIFORM 70% PERENNIAL VEGETATIVE COVER OR OTHER PERMANENT NON-VEGETATIVE COVER WITH A DENSITY SUFFICIENT TO RESIST ACCELERATED SURFACE EROSION AND SUBSURFACE CHARACTERISTICS SUFFICIENT TO RESIST SLIDING AND OTHER MOVEMENTS.

SITE - CIVIL GENERAL NOTES:

1. CONTRACTOR, AT THEIR OWN EXPENSE, SHALL ABIDE BY THE LATEST EDITIONS OF ALL OSHA REGULATIONS AND REQUIREMENTS.
2. THERE SHALL BE NO CLAIMS AGAINST THE OWNER FOR WORK STOPPAGES DUE TO ACTS OF GOD, WEATHER CONDITIONS, STOP WORK ORDERS (VERBAL AND/OR WRITTEN), UNDERESTIMATION OF WORK, ESTIMATED QUANTITIES, MATERIALS, SUPPLIES, TOOLS, CORRECTION OF SAFETY PROBLEMS, OR ANY OTHER REASON.
3. ALL QUANTITIES SHOWN ON THE DRAWING ARE ESTIMATED QUANTITIES ONLY. IT SHALL BE THE RESPONSIBILITY OF THE CONTRACTOR TO FIELD VERIFY AND ASCERTAIN ALL EXISTING CONDITIONS, DIMENSIONS AND QUANTITIES.
4. ALL WORK SHALL BE PERFORMED BY THOSE WHO ARE SKILLED IN THEIR TRADE, JOURNEYMEN MECHANICS, TO PRODUCE A FIRST CLASS JOB. THE CONTRACTOR IS ADVISED THAT WORK DEEMED UNSUITABLE, UNACCEPTABLE, SECOND CLASS IN NATURE BY THE OWNER OR DESIGN ENGINEER SHALL BE DEEMED NON-ACCEPTABLE AND THE CONTRACTOR SHALL REMOVE, REPLACE, RE-DO, TO THE SATISFACTION OF THE ENGINEER, THE UNACCEPTABLE WORK AT NO ADDITIONAL COST TO THE OWNER. THERE SHALL BE NO ADDITIONAL CLAIMS AGAINST THE OWNER FOR THE ABOVE.
5. CONTRACTOR SHALL USE DIG SAFELY NY "DIAL 811".
6. CONTRACTOR SHALL BE RESPONSIBLE TO VERIFY AND ASCERTAIN IN THE FIELD, ALL EXISTING UTILITIES, EXISTING CONDITIONS, FIELD MEASUREMENTS, DIMENSIONS, AND QUANTITIES RELATED TO THE PROJECT.
7. THE CONTRACTOR SHALL BE RESPONSIBLE TO VERIFY AND ASCERTAIN THE LOCATION, DEPTH, DIRECTION, AND SIZE OF ANY AND ALL UTILITIES EXISTING IN THE GENERAL VICINITY OF THE WORK AREA.
8. IT SHALL BE THE CONTRACTOR'S RESPONSIBILITY TO REPAIR ANY UTILITY DISRUPTED, BROKEN OR OTHERWISE RENDERED NON-FUNCTIONAL DUE TO THE WORK PERFORMED AT NO ADDITIONAL COST TO THE OWNER DURING THIS COURSE OF WORK.
9. IT SHALL BE THE CONTRACTOR'S RESPONSIBILITY TO PROPERLY SUPPORT ANY UTILITY ENCOUNTERED IN THE COURSE OF THIS WORK.
10. THE CONTRACTOR SHALL BE RESPONSIBLE TO REPAIR ANY DAMAGE CAUSED BY CONSTRUCTION OF THIS PROJECT AT THE CONTRACTOR'S EXPENSE.
11. THE CONTRACTOR SHALL SECURE ALL EXTERIOR WORK AND STAGING AREAS WITH ACCEPTABLE FENCING.
12. THE CONTRACTOR SHALL NOT LEAVE ANY EXCAVATED WORK AREA UNATTENDED FOR ANY REASON, UNLESS SAFETY PARTITIONS, SAFETY FENCING AND COVERING FOR ALL OPEN EXCAVATIONS ARE INSTALLED AND SECURED.
13. THE CONTRACTOR SHALL LEAVE THE WORK SITE CLEAN AND SECURED AT THE END OF EACH WORKING DAY. THE WORK SITE SHALL NOT BE LEFT UNATTENDED AT ANY TIME BY THE CONTRACTOR UNLESS THE WORK AREA IS PROPERLY SECURED BY THE CONTRACTOR.
14. THE CONTRACTOR IS ADVISED THAT THEY ARE SOLELY RESPONSIBLE FOR THE SAFETY OF THE WORK SITE AND SHALL TAKE ALL ACTIONS TO ELIMINATE ANY SAFETY HAZARDS THAT SHALL EXIST AND POSE A THREAT OF HARM TO EMPLOYEES OR REPRESENTATIVES OF THE OWNER, EMPLOYEES OF THE CONTRACTOR OR OTHER(S). IT SHALL BE THE SOLE RESPONSIBILITY OF THE CONTRACTOR TO TAKE IMMEDIATE ACTION TO ALLEVIATE ANY SAFETY HAZARD THAT MAY EXIST WITHOUT DIRECTION FROM THE TOWN, OWNER, ENGINEER OR OTHERS.
15. CONTRACTOR SHALL SAW CUT WITH PROPER BLADE ANY ROADS, CURBS AND SIDEWALKS ENCOUNTERED IN THE COURSE OF THIS WORK.
16. ALL HOLES SHALL BE CORE-DRILLED WITH DIAMOND CORE BITS.
17. CONTRACTOR SHALL BE RESPONSIBLE TO REMOVE ANY AND ALL DEBRIS FROM THE SITE REGULARLY AND DISPOSE OF SAME OFF SITE IN ACCORDANCE WITH ALL LOCAL AND STATE REGULATIONS.
18. THE CONTRACTOR SHALL MAINTAIN THE WORK SITE IN A NEAT AND CLEAN CONDITION. THE WORK SITE SHALL BE CLEANED DAILY OF CONSTRUCTION DEBRIS
19. GRADE AND RE-SEED AREAS DAMAGED BY TRENCHING AND CONSTRUCTION VEHICLES
20. GRADING AND RE-SEEDING TO INCLUDE; TOP SOIL, FERTILIZER, SEEDS AND PROTECTIVE BEDDING.
21. SUB-GRADE FILL TO BE COMPACTED TO 95% STANDARD PROCTOR RELATIVE DENSITY AND PAVEMENT AREAS SHALL HAVE SUB-GRADE COMPACTED TO 95% MODIFIED RELATIVE DENSITY PER AASHTO REQUIREMENTS.
22. PROVIDE PROTECTIVE MEASURES FOR ALL TREES, BUSHES AND DECORATIVE SHRUBBERY THAT IS TO REMAIN. CONTRACTOR TO REPLACE ALL VEGETATION DAMAGED DURING CONSTRUCTION AT NO COST TO THE OWNER.
23. ALL CONSTRUCTION VEHICLES WILL HAVE A FUNCTIONING BACKUP ALARM.

RESOLUTIONS OF THE CHESTER ZONING BOARD OF APPEALS

TOWN OF CHESTER

ZONING BOARD OF APPEALS

RESOLUTION

Application of Primo Sports, seeking an interpretation of Section 98-29(A)(1) of the Zoning Ordinance of the Town of Chester, as it pertains to the applicant's property bounded by Route 94, Glenmere Road and Green Drive, Chester, New York, also known as Section 6, Block 1, Lot 85.2 on the Tax Map of the Town of Chester, New York, that the proposed use qualifies as an annual membership club providing outdoor recreational facilities in a SR-1 District.

Members Present:
Dimitrios Lambros, Chairman
Julie Bell
Ernie Damiani
Vincent Finizia
Walter Popolio

Others:
J. David Allman, Esq., ZBA Attorney
Dot Wierzbicki, ZBA Secretary

Whereas, the application consists of a Town of Chester Zoning Board of Appeals application form, a Site plan of the property (Revised), a letter from the Town of Chester Planning Board dated July 17, 2014, a letter from the Orange County Department of Planning dated July 18, 2014, letters from Barbara Utter dated July 24, 2014,Tim Miller Associates, Inc. dated October 6, 2014, John Sgambitti of Florida Youth Soccer dated October 15, 2014, Eric Amundson of Chester Soccer Club undated and Piere St-Denis of Warwick Soccer Club dated October 7, 2014; and

MOTION made to grant the interpretation made by: DIMITRIOS LAMBROS

Second made by: VINCENT FINIZIA

The roll for the vote was as follows:

Members voting to grant the variance:
Dimitios Lambros
Julie Bell
Ernie Damiani
Vincent Finizia
Walter Popolio

Members voting to deny the variance:
None

[The Chairman declared the resolution PASSED by a vote of 5 to 0 and directed the Clerk to file this resolution.]

NOW THEREFORE BE IT RESOLVED, that the Zoning Board of Appeals of the Town of Chester, New York, APPROVES the application for an interpretation of Section 98-29(A)(1) of the Zoning Ordinance of the Town of Chester, as it pertains to the property bounded by Route 94, Glenmere Road and Green Drive, Chester, New York, also known as Section 6, Block 1, Lot 85.2 on the Tax Map of the Town of Chester, New York, that the proposed use qualifies as an annual membership club providing outdoor recreational facilities in an SR-1 District.

DATED: October 27, 2014
Chester, New York

Dimitrios Lambros , Chairman — Date 10/27/14

TOWN OF CHESTER

ZONING BOARD OF APPEALS

OCT 28
TOWN CL
CHESTER, N

RESOLUTION

Application of Primo Sports, seeking an area variance of 24.2 acres to allow development of a 25.80 acre site in an SR-1 district, when a minimum of 50 acres is required by the Zoning Ordinance of the Town of Chester, as it pertains to the property bounded by Route 94, Glenmere Road and Green Drive, Chester, New York, also known as Section 6, Block 1, Lot 85.2 on the Tax Map of the Town of Chester, New York.

Members Present:
Dimitrios Lambros, Chairman
Julie Bell
Ernie Damiani
Vincent Finizia
Walter Popolio

Others:
J. David Allman, Esq., ZBA Attorney
Dot Wierzbicki, ZBA Secretary

Whereas, the application consists of a Town of Chester Zoning Board of Appeals application form, a Site Plan of the property, a letter from the Town of Chester Planning Board dated July 17, 2014, a letter from the Orange County Department of Planning dated July 18, 2014 and letters from Barbara Utter dated July 24, 2014, Tim Miller Associates, Inc. dated October 6, 2014, John Sgambitti of Florida Youth Soccer dated October 15, 2014, Eric Amundson of Chester Soccer Club, undated, and Piere St-Denis of Warwick Soccer Club dated October 7, 2014; and

Whereas, the granting of the variance will not produce an undesirable change in the character of the neighborhood, and a detriment to nearby properties will be created; and

Whereas, the Board voted 4 to 1, with Julie Bell voting in the affirmative, that the applicant could not achieve his objective via another reasonable alternative which does not involve the necessity of an area variance; and

Whereas, the variance sought by the applicant is substantial in nature; and

Whereas, the variance will not have an adverse impact on physical or environmental conditions in the neighborhood; and

Whereas, the hardship is self-created.

MOTION made to grant the variance made by: DIMITRIOS LAMBROS
Second made by: VINCENT FINIZIA

The roll for the vote was as follows:

Members voting to grant the variance:
Dimitios Lambros
Julie Bell
Ernie Damiani
Vincent Finizia
Walter Popolio

Members voting to deny the variance:
None

[The Chairman declared the resolution PASSED by a vote of 5 to 0 and directed the Clerk to file this resolution.]

NOW THEREFORE BE IT RESOLVED, that the Zoning Board of Appeals of the Town of Chester, New York, APPROVES the area variance of 24.2 acres to allow development of a 25.80 acre site in an SR-1 district, when a minimum of 50 acres is required by the Zoning Ordinance of the Town of Chester, as it pertains to the property bounded by Route 94, Glenmere Road and Green Drive, Chester, New York, also known as Section 6, Block 1, Lot 85.2 on the Tax Map of the Town of Chester, New York.

DATED: October 27, 2014
Chester, New York

Dimitrios Lambros , Chairman — Date 10/27/14

TOWN OF CHESTER PLANNING BOARD APPROVAL

REV #	DATE	REMARKS:	ISSUE #	DATE	ISSUED FOR:
			5	02/12/15	TO PLANNING BOARD
9	05/11/15	TO PLANNING BOARD	4	10/29/14	TO PLANNING BOARD
8	04/01/15	TO PLANNING BOARD	3	10/07/14	TO ZBA
7	03/13/15	TO ORANGE COUNTY PLANNING	2	7/10/14	TO PLANNING BOARD
6	03/09/15	TO NYSDOT, NYSDEC,	1	5/27/14	TO ZBA FOR VARIANCE

⅛" ¼" ½" 0 1" 2"
REFERENCE SCALE

UNAUTHORIZED ALTERATION OR ADDITION TO A PLAN BEARING A LICENSED PROFESSIONAL ENGINEER'S SEAL IS A VIOLATION OF SECTION 7209, SUB-DIVISION 2 OF THE N.Y. STATE EDUCATION LAW.

Dig Safely. New York Call 811 before you dig

FELLENZER ENGINEERING LLP
www.fellp.com
22 Mulberry St., Suite 2A,
Middletown, NY 10940
t 845-343-1481 fx 845-343-4986
181 Church St., Suite 100,
Poughkeepsie, NY 12601
t 845-454-9704 fx 855-320-8735

MARK D. FELLENZER, P.E.
STATE OF NEW YORK · MARK DAVID FELLENZER · 065496 · PROFESSIONAL ENGINEER
NY PROFESSIONAL ENGINEER NO. 065496-1

PROJECT TITLE:
PRIMO SPORTS COMPLEX
PRELIMINARY SITE PLAN
STATE ROUTE 94 CHESTER, NY 10918

DRAWING TITLE:
LEGENDS & NOTES

DESIGNED BY:	DRAWN BY:	APPROVED BY PM:	APPROVED BY PIC:	DRAWING #:
RDF	SAR	ACL	MDF	C-000
DATE: 5/27/2014	SCALE: AS SHOWN		F.E. PROJECT #: 14-159	PAGE 2 of 16

File Name: F:\2014\14-159 Chester Sports Complex\DWGs\C-000.dwg (Layout: C-000)
Date: Mon, Nov 16, 2015 - 7:31 AM (Name: sar)

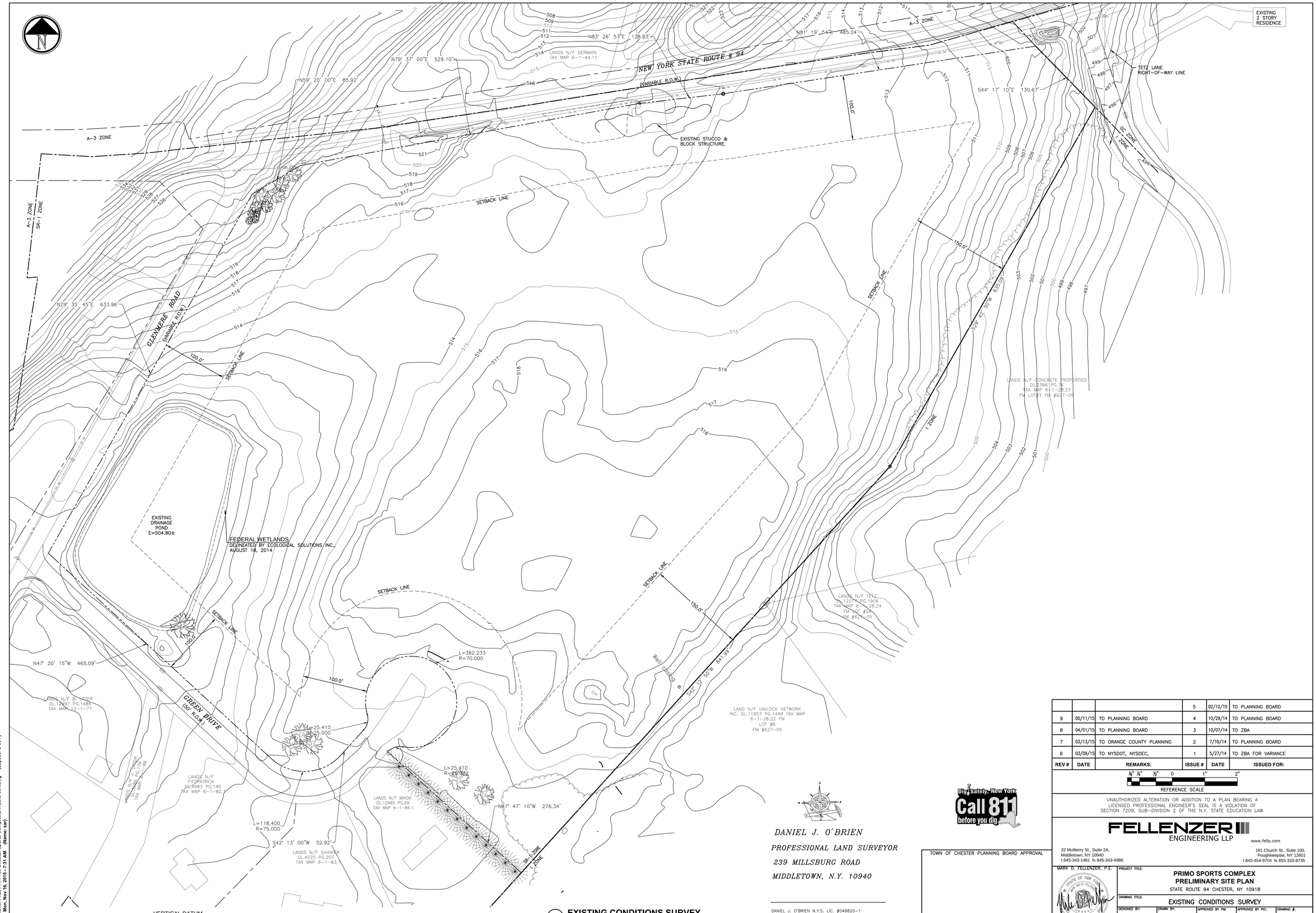

VERTICAL DATUM
ORANGE COUNTY WATER AUTHORITY
TOPOGRAPHICAL DATA

1 EXISTING CONDITIONS SURVEY
1"=100'

DANIEL J. O'BRIEN
PROFESSIONAL LAND SURVEYOR
239 MILLSBURG ROAD
MIDDLETOWN, N.Y. 10940

DANIEL J. O'BRIEN N.Y.S. LIC. #049820-1

TOWN OF CHESTER PLANNING BOARD APPROVAL

Dig Safely. New York
Call 811 before you dig

REV #	DATE	REMARKS:	ISSUE #	DATE	ISSUED FOR:
			5	02/12/15	TO PLANNING BOARD
9	05/11/15	TO PLANNING BOARD	4	10/29/14	TO PLANNING BOARD
8	04/01/15	TO PLANNING BOARD	3	10/07/14	TO ZBA
7	03/13/15	TO ORANGE COUNTY PLANNING	2	7/10/14	TO PLANNING BOARD
6	03/09/15	TO NYSDOT, NYSDEC,	1	5/27/14	TO ZBA FOR VARIANCE

1/8" 1/4" 1/2" 0 1" 2"
REFERENCE SCALE

UNAUTHORIZED ALTERATION OR ADDITION TO A PLAN BEARING A LICENSED PROFESSIONAL ENGINEER'S SEAL IS A VIOLATION OF SECTION 7209, SUB-DIVISION 2 OF THE N.Y. STATE EDUCATION LAW.

FELLENZER ENGINEERING LLP
www.fellp.com
22 Mulberry St., Suite 2A,
Middletown, NY 10940
t 845-343-1481 fx 845-343-4986
181 Church St., Suite 100,
Poughkeepsie, NY 12601
t 845-454-9704 fx 855-320-8735
MARK D. FELLENZER, P.E.
NY PROFESSIONAL ENGINEER NO. 064946-1

PROJECT TITLE:
PRIMO SPORTS COMPLEX
PRELIMINARY SITE PLAN
STATE ROUTE 94 CHESTER, NY 10918

DRAWING TITLE:
EXISTING CONDITIONS SURVEY

DESIGNED BY:	DRAWN BY:	APPROVED BY PM:	APPROVED BY PIC:	DRAWING #:
RDF	SAR	ACL	MDF	C-001
DATE: 5/27/2014	SCALE: AS SHOWN		FE PROJECT #: 14-159	PAGE 3 OF 16

File Name: F:\2014\14-159 Chester Sports Complex\DWG\C-001.dwg (Layout: C-001)
Date: Mon, Nov 16, 2015 - 7:31 AM (Name: sar)

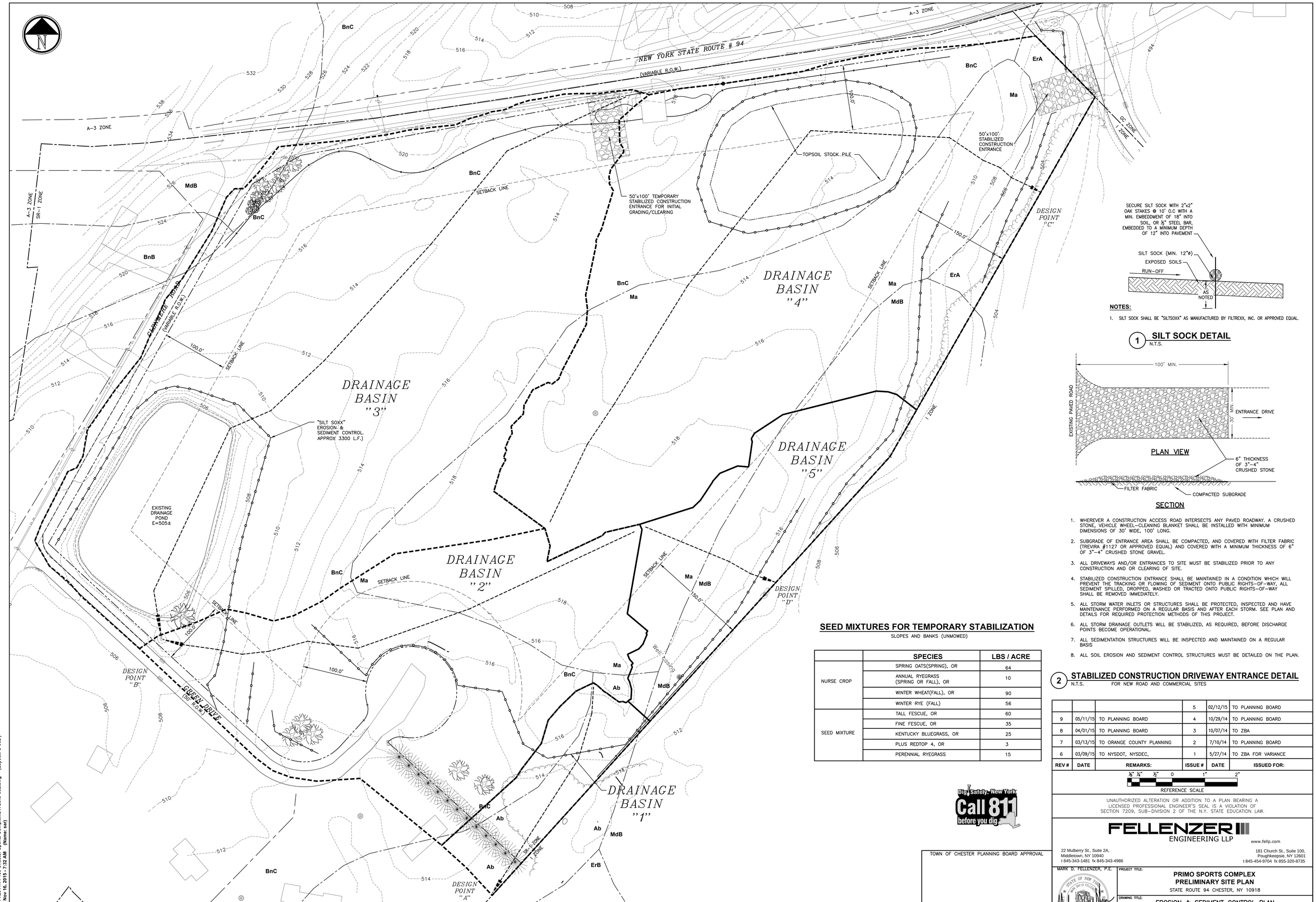

1 **EROSION & SEDIMENT CONTROL PLAN**
1"=50'

NOTES:

1. SILT SOCK SHALL BE "SILTSOXX" AS MANUFACTURED BY FILTREXX, INC. OR APPROVED EQUAL.

1 **SILT SOCK DETAIL**
N.T.S.

SECTION

1. WHEREVER A CONSTRUCTION ACCESS ROAD INTERSECTS ANY PAVED ROADWAY. A CRUSHED STONE, VEHICLE WHEEL-CLEANING BLANKET SHALL BE INSTALLED WITH MINIMUM DIMENSIONS OF 30' WIDE, 100' LONG.
2. SUBGRADE OF ENTRANCE AREA SHALL BE COMPACTED, AND COVERED WITH FILTER FABRIC (TREVIRA #1127 OR APPROVED EQUAL) AND COVERED WITH A MINIMUM THICKNESS OF 6" OF 3"-4" CRUSHED STONE GRAVEL.
3. ALL DRIVEWAYS AND/OR ENTRANCES TO SITE MUST BE STABILIZED PRIOR TO ANY CONSTRUCTION AND OR CLEARING OF SITE.
4. STABILIZED CONSTRUCTION ENTRANCE SHALL BE MAINTAINED IN A CONDITION WHICH WILL PREVENT THE TRACKING OR FLOWING OF SEDIMENT ONTO PUBLIC RIGHTS-OF-WAY, ALL SEDIMENT SPILLED, DROPPED, WASHED OR TRACTED ONTO PUBLIC RIGHTS-OF-WAY SHALL BE REMOVED IMMEDIATELY.
5. ALL STORM WATER INLETS OR STRUCTURES SHALL BE PROTECTED, INSPECTED AND HAVE MAINTENANCE PERFORMED ON A REGULAR BASIS AND AFTER EACH STORM. SEE PLAN AND DETAILS FOR REQUIRED PROTECTION METHODS OF THIS PROJECT.
6. ALL STORM DRAINAGE OUTLETS WILL BE STABILIZED, AS REQUIRED, BEFORE DISCHARGE POINTS BECOME OPERATIONAL.
7. ALL SEDIMENTATION STRUCTURES WILL BE INSPECTED AND MAINTAINED ON A REGULAR BASIS
8. ALL SOIL EROSION AND SEDIMENT CONTROL STRUCTURES MUST BE DETAILED ON THE PLAN.

2 **STABILIZED CONSTRUCTION DRIVEWAY ENTRANCE DETAIL**
N.T.S. FOR NEW ROAD AND COMMERCIAL SITES

SEED MIXTURES FOR TEMPORARY STABILIZATION

SLOPES AND BANKS (UNMOWED)

	SPECIES	LBS / ACRE
NURSE CROP	SPRING OATS(SPRING), OR	64
	ANNUAL RYEGRASS (SPRING OR FALL), OR	10
	WINTER WHEAT(FALL), OR	90
	WINTER RYE (FALL)	56
SEED MIXTURE	TALL FESCUE, OR	60
	FINE FESCUE, OR	35
	KENTUCKY BLUEGRASS, OR	25
	PLUS REDTOP 4, OR	3
	PERENNIAL RYEGRASS	15

REV #	DATE	REMARKS:	ISSUE #	DATE	ISSUED FOR:
			5	02/12/15	TO PLANNING BOARD
9	05/11/15	TO PLANNING BOARD	4	10/29/14	TO PLANNING BOARD
8	04/01/15	TO PLANNING BOARD	3	10/07/14	TO ZBA
7	03/13/15	TO ORANGE COUNTY PLANNING	2	7/10/14	TO PLANNING BOARD
6	03/09/15	TO NYSDOT, NYSDEC,	1	5/27/14	TO ZBA FOR VARIANCE

⅛" ¼" ½" 0 1" 2"
REFERENCE SCALE

UNAUTHORIZED ALTERATION OR ADDITION TO A PLAN BEARING A LICENSED PROFESSIONAL ENGINEER'S SEAL IS A VIOLATION OF SECTION 7209, SUB-DIVISION 2 OF THE N.Y. STATE EDUCATION LAW.

Dig Safely. New York Call 811 before you dig

TOWN OF CHESTER PLANNING BOARD APPROVAL

FELLENZER ENGINEERING LLP
www.fellp.com
22 Mulberry St., Suite 2A, Middletown, NY 10940 t 845-343-1481 fx 845-343-4986
181 Church St., Suite 100, Poughkeepsie, NY 12601 t 845-454-9704 fx 855-320-8735
MARK D. FELLENZER, P.E.
NY PROFESSIONAL ENGINEER NO. 064946-1

PROJECT TITLE: **PRIMO SPORTS COMPLEX PRELIMINARY SITE PLAN**
STATE ROUTE 94 CHESTER, NY 10918

DRAWING TITLE: EROSION & SEDIMENT CONTROL PLAN

DESIGNED BY:	DRAWN BY:	APPROVED BY PM:	APPROVED BY PIC:	DRAWING #:
RDF	SAR	ACL	MDF	C-002
DATE: 5/27/2014	SCALE: AS SHOWN	FE PROJECT #: 14-159		PAGE 4 OF 16

File Name: F:\2014\14-159 Chester Sports Complex\DWG\C-002.dwg (Layout: C-002)
Date: Mon, Nov 16, 2015 - 7:32 AM (Name: sar)

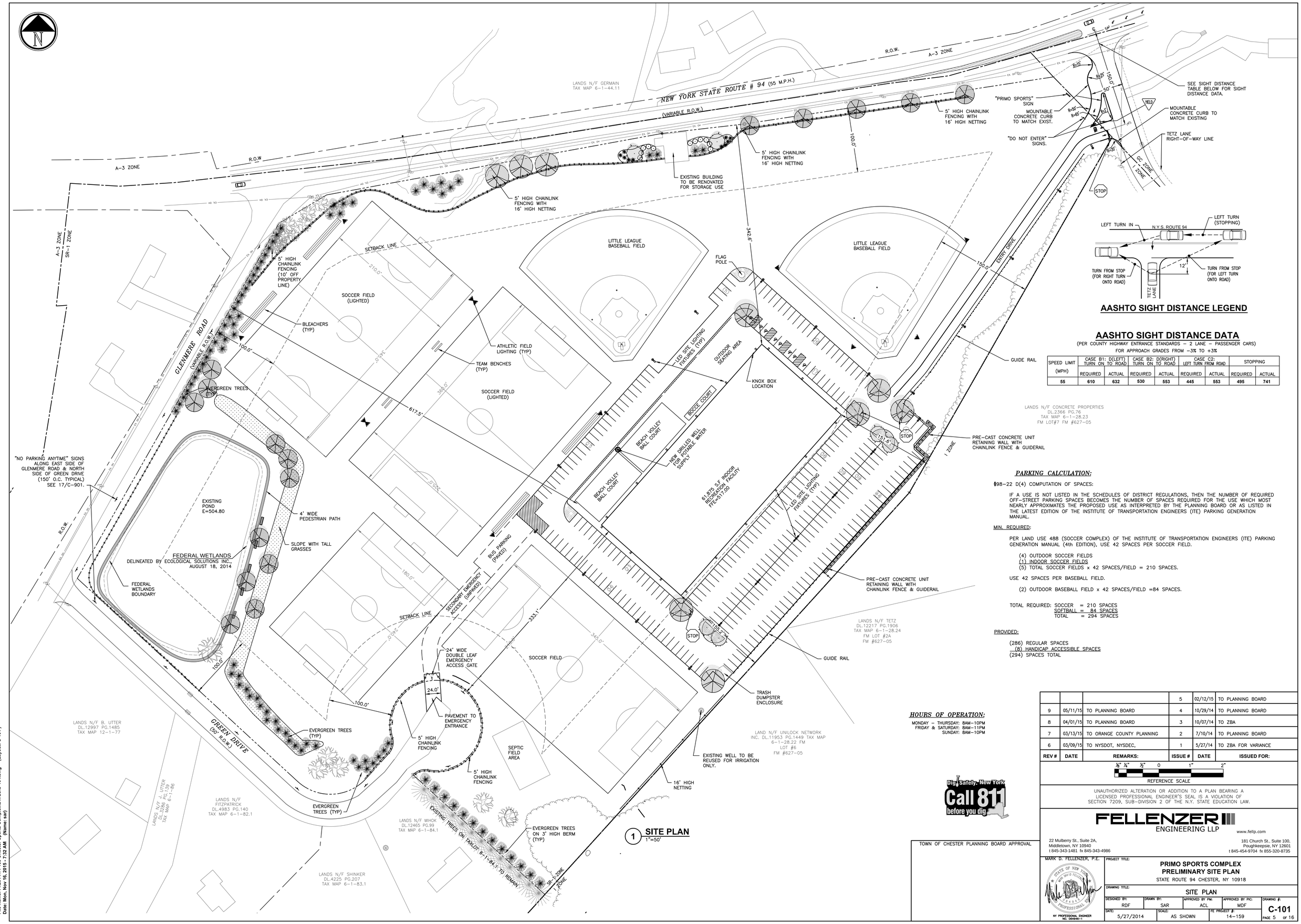

1 **SITE PLAN**
1"=50'

AASHTO SIGHT DISTANCE LEGEND

AASHTO SIGHT DISTANCE DATA

(PER COUNTY HIGHWAY ENTRANCE STANDARDS – 2 LANE – PASSENGER CARS)
FOR APPROACH GRADES FROM –3% TO +3%

SPEED LIMIT (MPH)	CASE B1: D(LEFT) TURN ON TO ROAD		CASE B2: D(RIGHT) TURN ON TO ROAD		CASE C2: LEFT TURN FROM ROAD		STOPPING	
	REQUIRED	ACTUAL	REQUIRED	ACTUAL	REQUIRED	ACTUAL	REQUIRED	ACTUAL
55	610	632	530	553	445	553	495	741

PARKING CALCULATION:

§98–22 D(4) COMPUTATION OF SPACES:

IF A USE IS NOT LISTED IN THE SCHEDULES OF DISTRICT REGULATIONS, THEN THE NUMBER OF REQUIRED OFF–STREET PARKING SPACES BECOMES THE NUMBER OF SPACES REQUIRED FOR THE USE WHICH MOST NEARLY APPROXIMATES THE PROPOSED USE AS INTERPRETED BY THE PLANNING BOARD OR AS LISTED IN THE LATEST EDITION OF THE INSTITUTE OF TRANSPORTATION ENGINEERS (ITE) PARKING GENERATION MANUAL.

MIN. REQUIRED:

PER LAND USE 488 (SOCCER COMPLEX) OF THE INSTITUTE OF TRANSPORTATION ENGINEERS (ITE) PARKING GENERATION MANUAL (4th EDITION), USE 42 SPACES PER SOCCER FIELD.

(4) OUTDOOR SOCCER FIELDS
(1) INDOOR SOCCER FIELDS
(5) TOTAL SOCCER FIELDS x 42 SPACES/FIELD = 210 SPACES.

USE 42 SPACES PER BASEBALL FIELD.

(2) OUTDOOR BASEBALL FIELD x 42 SPACES/FIELD =84 SPACES.

TOTAL REQUIRED: SOCCER = 210 SPACES
SOFTBALL = 84 SPACES
TOTAL = 294 SPACES

PROVIDED:

(286) REGULAR SPACES
(8) HANDICAP ACCESSIBLE SPACES
(294) SPACES TOTAL

HOURS OF OPERATION:

MONDAY – THURSDAY: 8AM–10PM
FRIDAY & SATURDAY: 8AM–11PM
SUNDAY: 8AM–10PM

REV #	DATE	REMARKS:	ISSUE #	DATE	ISSUED FOR:
			5	02/12/15	TO PLANNING BOARD
9	05/11/15	TO PLANNING BOARD	4	10/29/14	TO PLANNING BOARD
8	04/01/15	TO PLANNING BOARD	3	10/07/14	TO ZBA
7	03/13/15	TO ORANGE COUNTY PLANNING	2	7/10/14	TO PLANNING BOARD
6	03/09/15	TO NYSDOT, NYSDEC,	1	5/27/14	TO ZBA FOR VARIANCE

⅛" ¼" ½" 0 1" 2"
REFERENCE SCALE

UNAUTHORIZED ALTERATION OR ADDITION TO A PLAN BEARING A LICENSED PROFESSIONAL ENGINEER'S SEAL IS A VIOLATION OF SECTION 7209, SUB–DIVISION 2 OF THE N.Y. STATE EDUCATION LAW.

TOWN OF CHESTER PLANNING BOARD APPROVAL

FELLENZER ENGINEERING LLP
www.fellp.com
22 Mulberry St., Suite 2A,
Middletown, NY 10940
t 845-343-1481 fx 845-343-4986
181 Church St., Suite 100,
Poughkeepsie, NY 12601
t 845-454-9704 fx 855-320-8735
MARK D. FELLENZER, P.E.
NY PROFESSIONAL ENGINEER NO. 064946–1

PROJECT TITLE:
PRIMO SPORTS COMPLEX
PRELIMINARY SITE PLAN
STATE ROUTE 94 CHESTER, NY 10918

DRAWING TITLE: SITE PLAN

DESIGNED BY:	DRAWN BY:	APPROVED BY PM:	APPROVED BY PIC:	DRAWING #:
RDF	SAR	ACL	MDF	C-101
DATE: 5/27/2014	SCALE: AS SHOWN	FE PROJECT #: 14–159		PAGE 5 OF 16

File Name: F:\2014\14-159 Chester Sports Complex\DWGs\C-101.dwg (Layout: C-101)
Date/ Mon, Nov 16, 2015 - 7:32 AM (Name: sar)

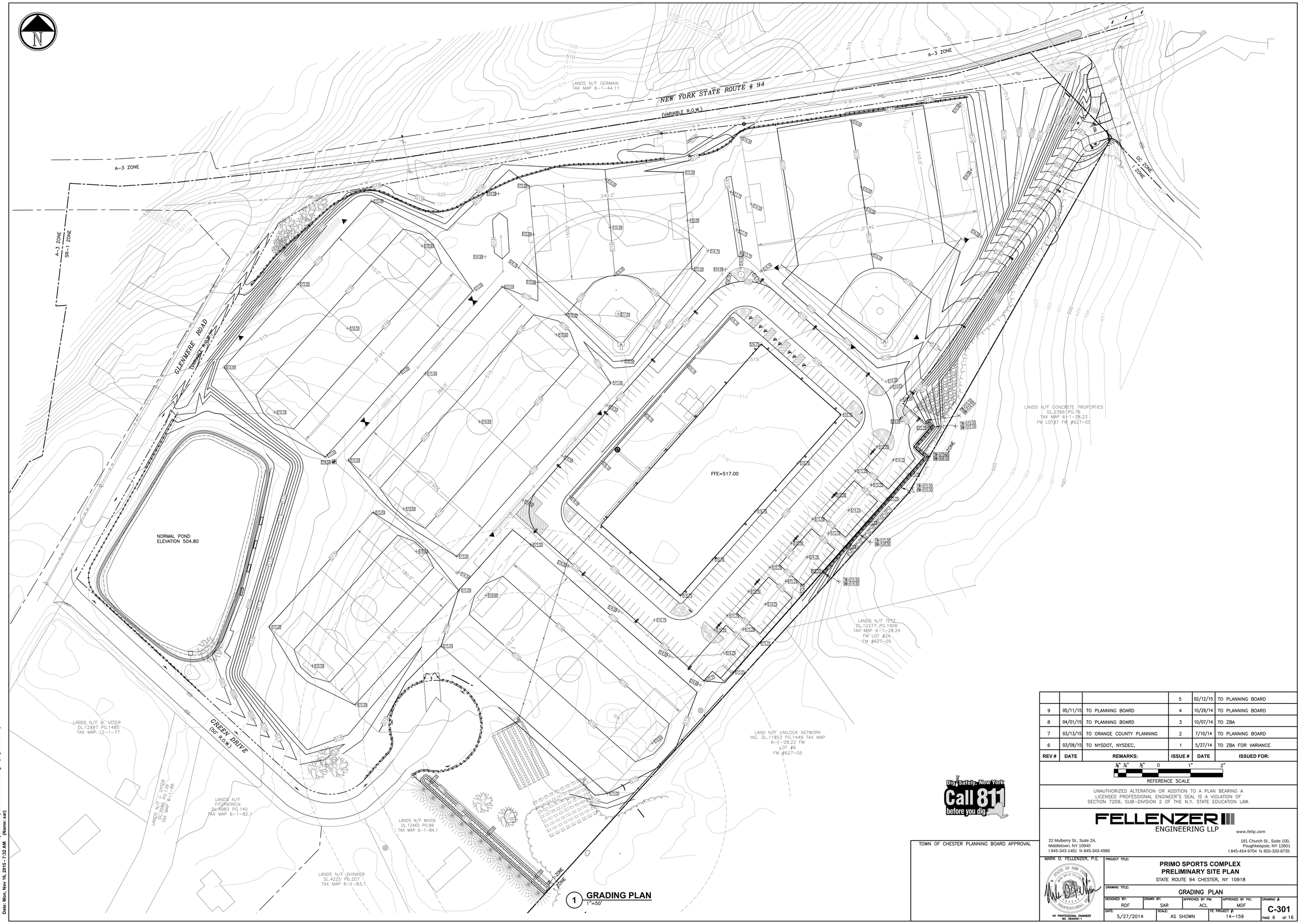

1 GRADING PLAN
1"=50'

File Name: F:\2014\14-159 Chester Sports Complex\DWG\C-301.dwg (Layout: C-301)
Date: Mon, Nov 16, 2015 7:32 AM (Name: sar)

REV #	DATE	REMARKS:	ISSUE #	DATE	ISSUED FOR:
			5	02/12/15	TO PLANNING BOARD
9	05/11/15	TO PLANNING BOARD	4	10/29/14	TO PLANNING BOARD
8	04/01/15	TO PLANNING BOARD	3	10/07/14	TO ZBA
7	03/13/15	TO ORANGE COUNTY PLANNING	2	7/10/14	TO PLANNING BOARD
6	03/09/15	TO NYSDOT, NYSDEC,	1	5/27/14	TO ZBA FOR VARIANCE

⅛" ¼" ½" 0 1" 2"
REFERENCE SCALE

UNAUTHORIZED ALTERATION OR ADDITION TO A PLAN BEARING A LICENSED PROFESSIONAL ENGINEER'S SEAL IS A VIOLATION OF SECTION 7209, SUB-DIVISION 2 OF THE N.Y. STATE EDUCATION LAW.

Dig Safely. New York
Call 811 before you dig

TOWN OF CHESTER PLANNING BOARD APPROVAL

FELLENZER ENGINEERING LLP
www.fellp.com
22 Mulberry St., Suite 2A,
Middletown, NY 10940
t 845-343-1481 fx 845-343-4986
181 Church St., Suite 100,
Poughkeepsie, NY 12601
t 845-454-9704 fx 855-320-8735
MARK D. FELLENZER, P.E.
NY PROFESSIONAL ENGINEER
NO. 084946-1

PROJECT TITLE:
PRIMO SPORTS COMPLEX
PRELIMINARY SITE PLAN
STATE ROUTE 94 CHESTER, NY 10918

DRAWING TITLE:
GRADING PLAN

DESIGNED BY:	DRAWN BY:	APPROVED BY PM:	APPROVED BY PIC:	DRAWING #:
RDF	SAR	ACL	MDF	C-301
DATE: 5/27/2014	SCALE: AS SHOWN	FE PROJECT #: 14-159		PAGE 6 OF 16

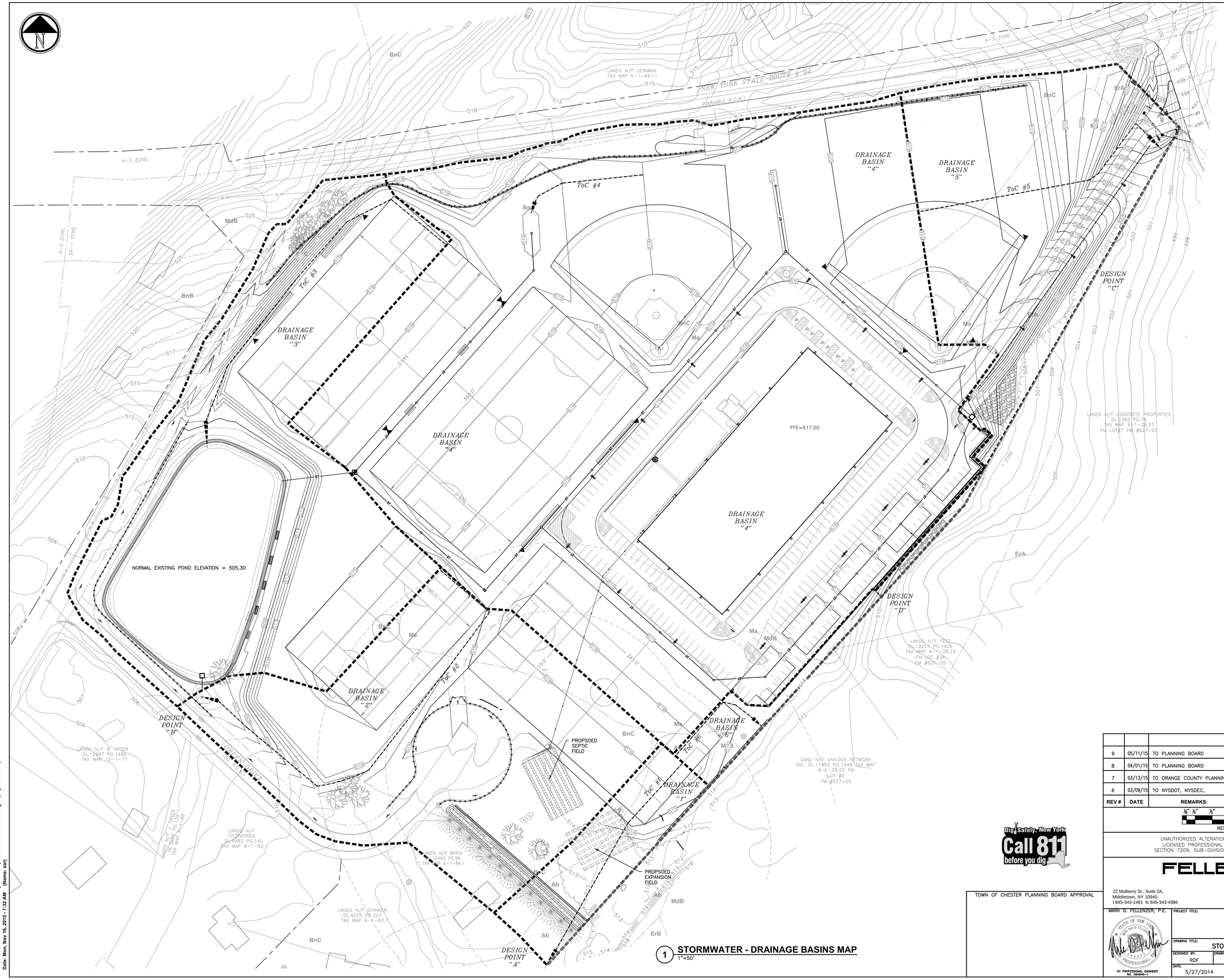

1 **STORMWATER - DRAINAGE BASINS MAP**
1"=50'

REV #	DATE	REMARKS:	ISSUE #	DATE	ISSUED FOR:
			5	02/12/15	TO PLANNING BOARD
9	05/11/15	TO PLANNING BOARD	4	10/29/14	TO PLANNING BOARD
8	04/01/15	TO PLANNING BOARD	3	10/07/14	TO ZBA
7	03/13/15	TO ORANGE COUNTY PLANNING	2	7/10/14	TO PLANNING BOARD
6	03/09/15	TO NYSDOT, NYSDEC,	1	5/27/14	TO ZBA FOR VARIANCE

⅛" ¼" ½" 0 1" 2"
REFERENCE SCALE

UNAUTHORIZED ALTERATION OR ADDITION TO A PLAN BEARING A LICENSED PROFESSIONAL ENGINEER'S SEAL IS A VIOLATION OF SECTION 7209, SUB-DIVISION 2 OF THE N.Y. STATE EDUCATION LAW.

Dig Safely. New York
Call 811 before you dig

TOWN OF CHESTER PLANNING BOARD APPROVAL

FELLENZER ENGINEERING LLP
www.fellp.com
22 Mulberry St., Suite 2A,
Middletown, NY 10940
t 845-343-1481 fx 845-343-4986
181 Church St., Suite 100,
Poughkeepsie, NY 12601
t 845-454-9704 fx 855-320-8735
MARK D. FELLENZER, P.E.
STATE OF NEW YORK · MARK DAVID FELLENZER · 084946 · PROFESSIONAL ENGINEER
NY PROFESSIONAL ENGINEER NO. 084946-1

PROJECT TITLE:
PRIMO SPORTS COMPLEX
PRELIMINARY SITE PLAN
STATE ROUTE 94 CHESTER, NY 10918

DRAWING TITLE:
STORMWATER– DRAINAGE BASINS MAP

DESIGNED BY:	DRAWN BY:	APPROVED BY PM:	APPROVED BY PIC:	DRAWING #:
RDF	SAR	ACL	MDF	C-401
DATE: 5/27/2014	SCALE: AS SHOWN		F.E PROJECT #: 14–159	PAGE 7 OF 16

File Name: F:\2014\14-159 Chester Sports Complex\DWG\C-401-402.dwg (Layout: C-401)
Date/Time: Mon, Nov 16, 2015 7:32 AM (Name: sar)

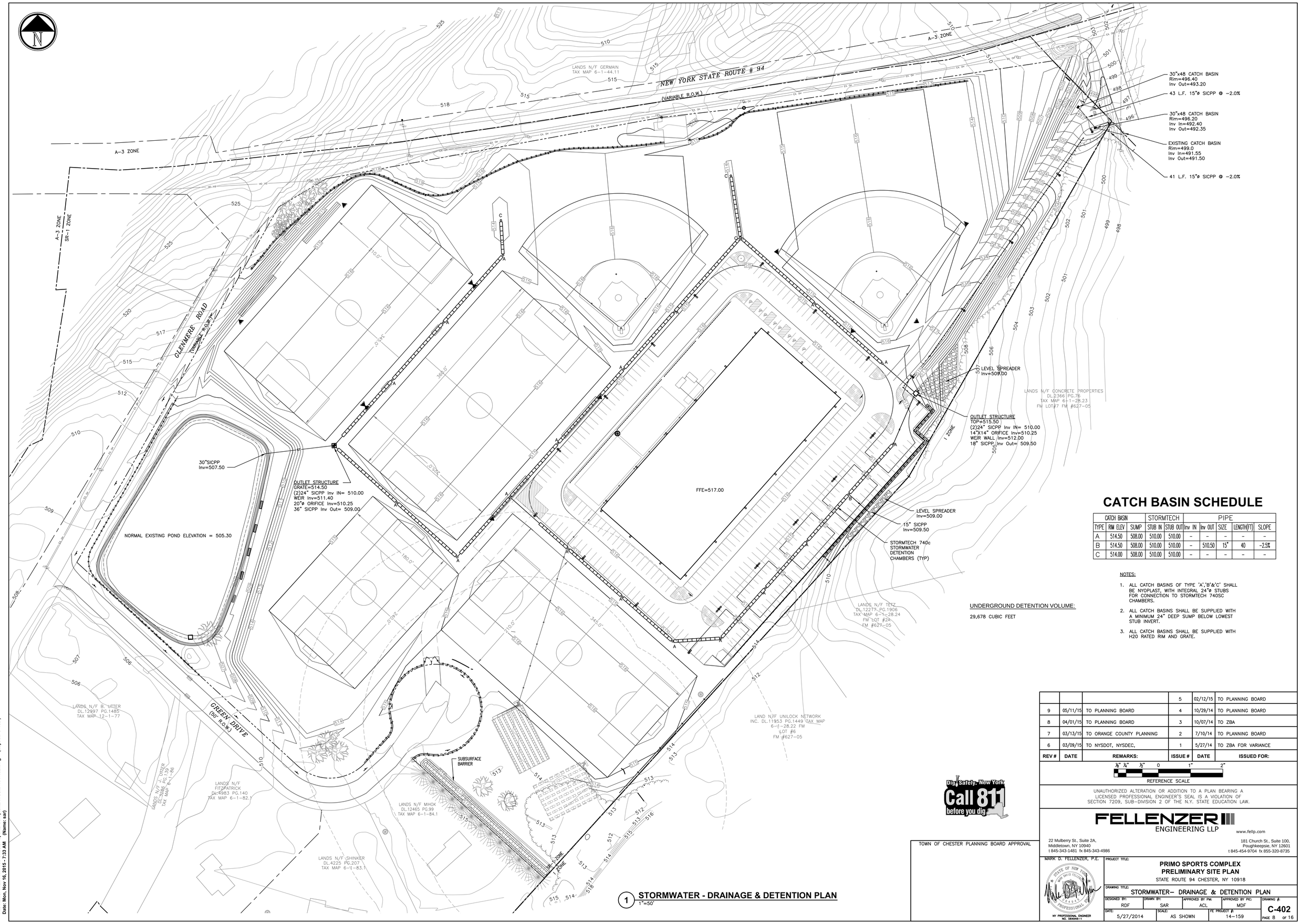

1 **STORMWATER - DRAINAGE & DETENTION PLAN**
1"=50'

CATCH BASIN SCHEDULE

CATCH BASIN			STORMTECH		PIPE				
TYPE	RIM ELEV	SUMP	STUB IN	STUB OUT	Inv IN	Inv OUT	SIZE	LENGTH(FT)	SLOPE
A	514.50	508.00	510.00	510.00	–	–	–	–	–
B	514.50	508.00	510.00	510.00	–	510.50	15"	40	-2.5%
C	514.00	508.00	510.00	510.00	–	–	–	–	–

NOTES:

1. ALL CATCH BASINS OF TYPE 'A','B'&'C' SHALL BE NYOPLAST, WITH INTEGRAL 24"ø STUBS FOR CONNECTION TO STORMTECH 740SC CHAMBERS.
2. ALL CATCH BASINS SHALL BE SUPPLIED WITH A MINIMUM 24" DEEP SUMP BELOW LOWEST STUB INVERT.
3. ALL CATCH BASINS SHALL BE SUPPLIED WITH H20 RATED RIM AND GRATE.

UNDERGROUND DETENTION VOLUME:

29,678 CUBIC FEET

REV #	DATE	REMARKS:	ISSUE #	DATE	ISSUED FOR:
			5	02/12/15	TO PLANNING BOARD
9	05/11/15	TO PLANNING BOARD	4	10/29/14	TO PLANNING BOARD
8	04/01/15	TO PLANNING BOARD	3	10/07/14	TO ZBA
7	03/13/15	TO ORANGE COUNTY PLANNING	2	7/10/14	TO PLANNING BOARD
6	03/09/15	TO NYSDOT, NYSDEC,	1	5/27/14	TO ZBA FOR VARIANCE

⅛" ¼" ½" 0 1" 2"
REFERENCE SCALE

UNAUTHORIZED ALTERATION OR ADDITION TO A PLAN BEARING A LICENSED PROFESSIONAL ENGINEER'S SEAL IS A VIOLATION OF SECTION 7209, SUB-DIVISION 2 OF THE N.Y. STATE EDUCATION LAW.

Dig Safely. New York
Call 811 before you dig

TOWN OF CHESTER PLANNING BOARD APPROVAL

FELLENZER ENGINEERING LLP
www.fellp.com
22 Mulberry St., Suite 2A,
Middletown, NY 10940
t 845-343-1481 fx 845-343-4986
181 Church St., Suite 100,
Poughkeepsie, NY 12601
t 845-454-9704 fx 855-320-8735
MARK D. FELLENZER, P.E.
NY PROFESSIONAL ENGINEER NO. 064946-1

PROJECT TITLE:
PRIMO SPORTS COMPLEX
PRELIMINARY SITE PLAN
STATE ROUTE 94 CHESTER, NY 10918

DRAWING TITLE: STORMWATER- DRAINAGE & DETENTION PLAN

DESIGNED BY:	DRAWN BY:	APPROVED BY PM:	APPROVED BY PIC:	DRAWING #:
RDF	SAR	ACL	MDF	C-402
DATE: 5/27/2014	SCALE: AS SHOWN		FE PROJECT #: 14-159	PAGE 8 OF 16

File Name: F:\2014\14-159 Chester Sports Complex\DWG\sIC-401-402.dwg (Layout: C-402)
Date: Mon, Nov 16, 2015 - 7:33 AM (Name: sar)

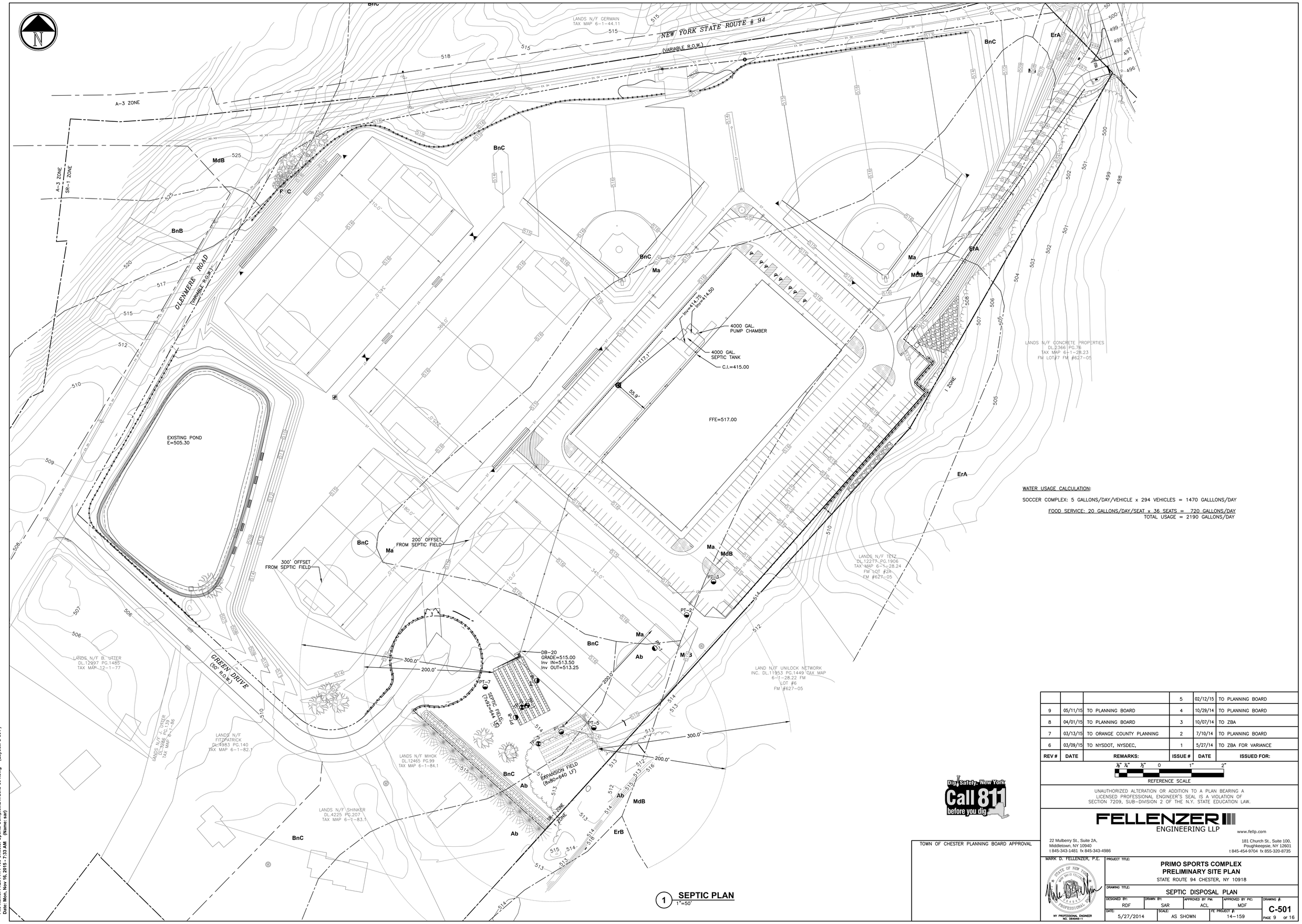

1 **SEPTIC PLAN**
1"=50'

WATER USAGE CALCULATION:

SOCCER COMPLEX: 5 GALLONS/DAY/VEHICLE x 294 VEHICLES = 1470 GALLLONS/DAY

FOOD SERVICE: 20 GALLONS/DAY/SEAT x 36 SEATS = 720 GALLONS/DAY
TOTAL USAGE = 2190 GALLONS/DAY

REV #	DATE	REMARKS:	ISSUE #	DATE	ISSUED FOR:
			5	02/12/15	TO PLANNING BOARD
9	05/11/15	TO PLANNING BOARD	4	10/29/14	TO PLANNING BOARD
8	04/01/15	TO PLANNING BOARD	3	10/07/14	TO ZBA
7	03/13/15	TO ORANGE COUNTY PLANNING	2	7/10/14	TO PLANNING BOARD
6	03/09/15	TO NYSDOT, NYSDEC,	1	5/27/14	TO ZBA FOR VARIANCE

⅛" ¼" ½" 0 1" 2"
REFERENCE SCALE

UNAUTHORIZED ALTERATION OR ADDITION TO A PLAN BEARING A LICENSED PROFESSIONAL ENGINEER'S SEAL IS A VIOLATION OF SECTION 7209, SUB-DIVISION 2 OF THE N.Y. STATE EDUCATION LAW.

Dig Safely. New York
Call 811
before you dig

TOWN OF CHESTER PLANNING BOARD APPROVAL

FELLENZER
ENGINEERING LLP
www.fellp.com
22 Mulberry St., Suite 2A,
Middletown, NY 10940
t 845-343-1481 fx 845-343-4986
181 Church St., Suite 100,
Poughkeepsie, NY 12601
t 845-454-9704 fx 855-320-8735
MARK D. FELLENZER, P.E.
NY PROFESSIONAL ENGINEER
NO. 064946-1

PROJECT TITLE:
PRIMO SPORTS COMPLEX
PRELIMINARY SITE PLAN
STATE ROUTE 94 CHESTER, NY 10918

DRAWING TITLE:
SEPTIC DISPOSAL PLAN

DESIGNED BY:	DRAWN BY:	APPROVED BY PM:	APPROVED BY PIC:	DRAWING #:
RDF	SAR	ACL	MDF	C-501
DATE: 5/27/2014	SCALE: AS SHOWN		FE PROJECT #: 14-159	PAGE 9 OF 16

File Name: F:\2014\14-159 Chester Sports Complex\DWG\sC-501.dwg (Layout: C-501)
Date: Mon, Nov 16, 2015 - 7:33 AM (Name: sar)

PERCOLATION TEST RESULTS

PERC TEST 1	DEPTH 36"
	TOTAL (MIN/IN)
RUN 1	00:00:21
RUN 2	00:00:27
RUN 3	00:00:30
RUN 4	00:00:30
RUN 5	00:00:28
RUN 6	00:00:32
RUN 7	00:00:30
RUN 8	00:01:02
RUN 9	00:01:13
RUN 10	00:01:18

DATE PERFORMED: 07–31–2014
PERFORMED BY:
FELLENZER ENGINERRING LLP.

PERC TEST 2	DEPTH 36"
	(MIN/IN)
RUN 1	00:00:58
RUN 2	00:01:01
RUN 3	00:01:03

DATE PERFORMED: 07–31–2014
PERFORMED BY:
FELLENZER ENGINERRING LLP.

PERC TEST 3	DEPTH 36"
	TOTAL (MIN/IN)
RUN 1	00:00:50
RUN 2	00:01:01
RUN 3	00:01:11
RUN 4	00:01:17

DATE PERFORMED: 07–31–2014
PERFORMED BY:
FELLENZER ENGINERRING LLP.

PERC TEST 4	DEPTH 30"
	TOTAL (MIN/IN)
RUN 1	00:01:44
RUN 2	00:01:51
RUN 3	00:02:16
RUN 4	00:02:32
RUN 5	00:02:43

DATE PERFORMED: 07–31–2014
PERFORMED BY:
FELLENZER ENGINERRING LLP.

PERC TEST 5	DEPTH 30"
	TOTAL (MIN/IN)
RUN 1	00:19:52
RUN 2	00:28:04
RUN 3	00:42:32
RUN 4	00:42:46

DATE PERFORMED: 07–31–2014
PERFORMED BY:
FELLENZER ENGINERRING LLP.

PERC TEST 6	DEPTH 30"
	TOTAL (MIN/IN)
RUN 1	00:01:01
RUN 2	00:01:13
RUN 3	00:01:22
RUN 4	00:01:49
RUN 5	00:02:05
RUN 6	00:02:15

DATE PERFORMED: 07–31–2014
PERFORMED BY:
FELLENZER ENGINERRING LLP.

PERC TEST 7	DEPTH 30"
	TOTAL (MIN/IN)
RUN 1	00:04:06
RUN 2	00:05:30
RUN 3	00:06:31
RUN 4	00:07:26
RUN 5	00:07:53

DATE PERFORMED: 07–31–2014
PERFORMED BY:
FELLENZER ENGINERRING LLP.

PERC TEST 8	DEPTH 30"
	TOTAL (MIN/IN)
RUN 1	00:05:09
RUN 2	00:08:24
RUN 3	00:10:37
RUN 4	00:11:37

DATE PERFORMED: 07–31–2014
PERFORMED BY:
FELLENZER ENGINERRING LLP.

PERCOLATION TEST RESULTS (WITNESSED)

PERC TEST 4	DEPTH 30"
	TOTAL (MIN/IN)
RUN 1	00:01:29
RUN 2	00:01:54
RUN 3	00:02:05
RUN 4	00:02:09

DATE PERFORMED: 11–20–2014
PERFORMED BY:
FELLENZER ENGINERRING LLP.

WITNESSED BY:
MIKE ANDERSEN, OCDOH
SCOTT BUCHHOLZ, FUSCO ENGINEERING

PERC TEST 8	DEPTH 30"
	TOTAL (MIN/IN)
RUN 1	00:13:19
RUN 2	00:22:30
RUN 3	00:23:57
RUN 4	00:24:57

DATE PERFORMED: 11–20–2014
PERFORMED BY:
FELLENZER ENGINERRING LLP.

WITNESSED BY:
MIKE ANDERSEN, OCDOH
SCOTT BUCHHOLZ, FUSCO ENGINEERING

DEEP PIT TEST RESULTS

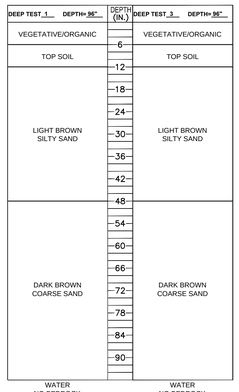

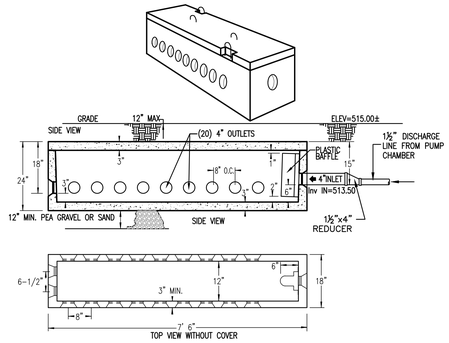

SPECIFICATIONS	PRECAST DISTRIBUTION BOXES MODEL DB–20 / 20 OUTLETS
CONCRETE MIN. STRENGTH: 4,000 PSI AT 28 DAYS REINFORCEMENT: #4 REBAR, 10GA. WIRE MESH AIR ENTRAINMENT: 5% PIPE CONNECTION: POLYLOK SEAL (PATENTED) WEIGHTS: BOX = 1,400 LBS, LID = 400 LBS LOAD RATING: 300 PSF	WOODARD'S CONCRETE PRODUCTS, INC. 629 LYBOLT ROAD, BULLVILLE, NY 10915 (845) 361–3471 / FAX 361–1050 WWW.WOODARDSCONCRETE.COM

1 DISTRIBUTION BOX DETAIL - DB-20
N.T.S.

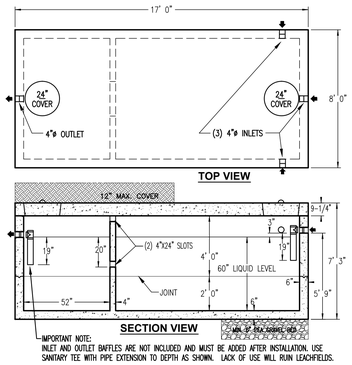

SPECIFICATIONS	PRECAST HEAVY DUTY TANKS 4,000 GALLON SEPTIC TANK
CONCRETE MIN. STRENGTH: 4,000 PSI AT 28 DAYS REINFORCEMENT: #4 & #5 REBAR / ASTM A615 AIR ENTRAINMENT: 5% CONSTRUCTION JOINT: BUTYL RUBBER SEALANT PIPE CONNECTION: POLYLOC SEAL OR AS NEEDED WEIGHT = 47,200 LBS LOAD RATING: HS20–44 + 30% / ASTM C857	WOODARD'S CONCRETE PRODUCTS, INC. 629 LYBOLT ROAD, BULLVILLE, NY 10915 (845) 361–3471 / FAX 361–1050 WWW.WOODARDSCONCRETE.COM

2 PRECAST CONCRETE - HEAVY DUTY 4000 GALLON SEPTIC TANK
N.T.S.

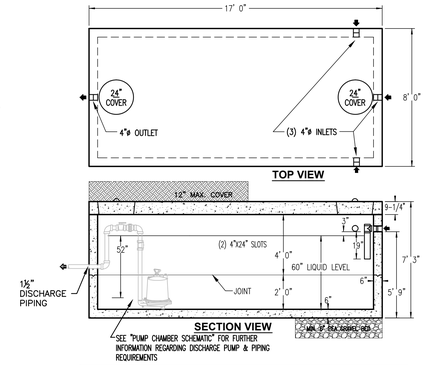

SPECIFICATIONS	PRECAST HEAVY DUTY TANKS 4,000 GALLON PUMP CHAMBER
CONCRETE MIN. STRENGTH: 4,000 PSI AT 28 DAYS REINFORCEMENT: #4 & #5 REBAR / ASTM A615 AIR ENTRAINMENT: 5% CONSTRUCTION JOINT: BUTYL RUBBER SEALANT PIPE CONNECTION: POLYLOC SEAL OR AS NEEDED WEIGHT = 46,000 LBS LOAD RATING: HS20–44 + 30% / ASTM C857	WOODARD'S CONCRETE PRODUCTS, INC. 629 LYBOLT ROAD, BULLVILLE, NY 10915 (845) 361–3471 / FAX 361–1050 WWW.WOODARDSCONCRETE.COM

3 PRECAST CONCRETE - HEAVY DUTY 4000 GALLON PUMP CHAMBER
N.T.S.

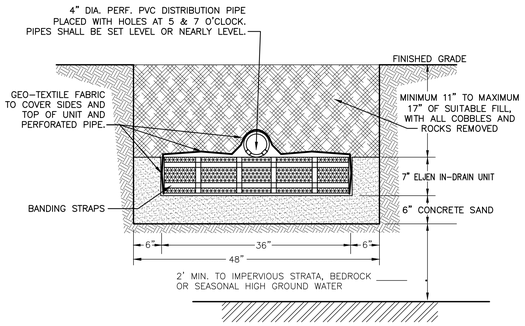

4 ELJEN IN-DRAIN CROSS SECTION TYPICAL LATERAL
N.T.S.

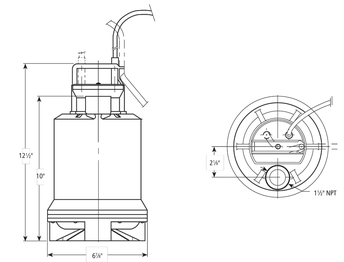

7 SUBMERSIBLE EFFLUENT PUMP DETAIL
N.T.S. GOULDS/ITT MODEL LEPO7

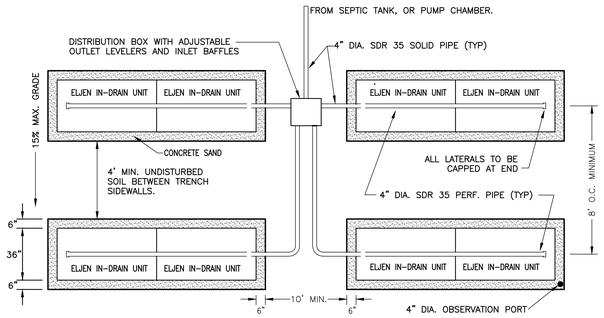

5 ELJEN ABSORPTION TRENCH CONFIGURATION
N.T.S.

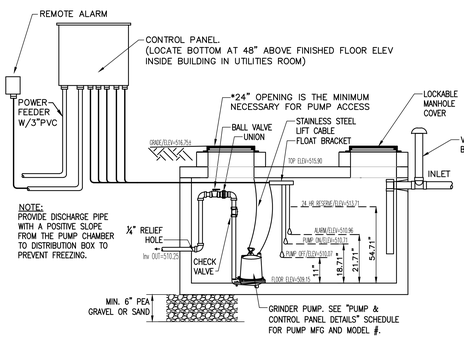

6 4000 GALLON PUMP CHAMBER SCHEMATIC
N.T.S.

PUMP STATION DESIGN CRITERIA:

(FOR SEPTIC ABSORPTION SYSTEMS)

1. THE VOLUME OF MANUFACTURER RECOMMENDED DOSAGE PER ELJEN "B34" UNIT IS 3 GALLIONS OR LESS PER UNIT. FOR (161) ELJEN UNITS, THE MAXIMUM DOSAGE SHALL BE 483 GALLONS.
2. THE VOLUME OF 600 LINEAL FEET OF 1–1/2"ø PIPE IS (600 LF x 0.0918 GAL/LF=55.08 GAL.) OR 55 GALLONS.
3. THE VOLUME OF EFFLUENT PUMPED BETWEEN "PUMP ON" AND "PUMP OFF" SHALL BE 483 GAL + 55 GAL OR 538 GALLONS
4. THE VOLUME OF A 16'x7'(I.D.) PUMP STATION PER FOOT OF DEPTH IS 837.76 GALLONS, OR 69.81 GALLONS PER INCH
5. THE REQUIRED ELEVATION DIFFERENCE BETWEEN PUMP ON AND OFF IS TO BE 7.71" INCHES @ 69.81/GAL/INCH OR 538 GALLONS
6. ALARM LEVEL SHALL BE SET AT 3" ABOVE "PUMP ON" LEVEL, WHICH IS 21.71" ABOVE TANK FLOOR.
7. THE PUMP CHAMBER SHALL PROVIDE A MINIMUM OF ONE DAY'S DESIGN FLOW STORAGE ABOVE THE ALARM LEVEL. THE DESIGN FLOW OF 2,235 GAL/DAY FOR A 16'x7'(I.D.) PUMP STATION IS EQUIVALENT TO 32.01" OR 33 INCHES OF LIQUID DEPTH. APPROXIMATELY 38.26 INCHES OF STORAGE WILL BE PROVIDED.

CALCULATION FOR FRICTION LOSS AND DYNAMIC HEAD

ITEM	QTY		FRICTION FACTOR		FRICTION FACTOR	EQUIVALENT LENGTH OF PIPE (IN FEET)
90° ELBOWS**	3	x	5.5	=	11.5	11.5
45° ELBOWS**	4	x	2.5	=	10.0	10.0
CHECK VALVE**	1	x	13.0	=	13.0	13.0
BALL VALVE**	1	x	55.0	=	55.0	55.0
FEET OF PIPE	700	x	1.0	=	1.0	700.0

(**OR EQUIVALENT)

	TOTAL PIPE LENTGH EQUIVALENT=	789.5
	FRICTION LOSS PER/FT. @ 30 GPM	x 0.0181
	TOTAL FRICTION LOSS	= 14.289
14.30		
+ 4.35	VERTICAL ELEVATION FROM PUMP BOTTOM	
= 18.65	TOTAL DYNAMIC HEAD	

MINIMUM FLOW REQUIRED TO MAINTAIN SCOURING VELOCITY OF 2ft/SECOND IN A 1.5"ø SIZE PIPE = 11.014 GPM.

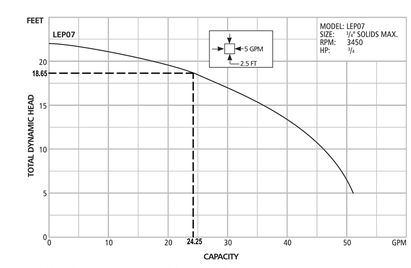

* Vertical distance from water level to highest point in discharge – plus pipe friction.
Maximum pump rated submergence is 16 ft. for LEPO7.

8 PUMP CURVE
N.T.S. GOULDS/ITT MODEL LEPO7

DEEP PIT TEST RESULTS (WITNESSED)

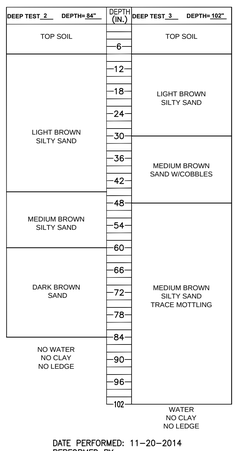

DATE PERFORMED: 11–20–2014
PERFORMED BY:
FELLENZER ENGINERRING LLP.

WITNESSED BY:
MIKE ANDERSEN, OCDOH
SCOTT BUCHHOLZ, FUSCO ENGINEERING

SEPTIC DESIGN DATA TABLE - ELJEN "IN DRAIN" SYSTEM

RESULTS #1	RESULTS #2	DESIGN RATE (MIN/IN)	REQUIRED LINEAL FEET OF STANDARD TRENCH REQUIRED FOR DESIGN RATE (2,235 GPD)	DESIGN CALCULATIONS & QTY'S FOR SYSTEM 1,834 LF / 3 (ELJEN SYTEM MULTIPLIER)=612LF = (153) ELJEN UNITS: # LINES	LINE LENGTH	TOTAL LENGTH	SYSTEM PROVIDED	TOTAL UNITS PROVIDED:
2:09	24:57	21–30	1,834 LF STD TRENCH	7 X	92 =	644	ELJEN	(161) "B43" ELJEN UNITS

REV #	DATE	REMARKS:	ISSUE #	DATE	ISSUED FOR:
			5	02/12/15	TO PLANNING BOARD
9	05/11/15	TO PLANNING BOARD	4	10/29/14	TO PLANNING BOARD
8	04/01/15	TO PLANNING BOARD	3	10/07/14	TO ZBA
7	03/13/15	TO ORANGE COUNTY PLANNING	2	7/10/14	TO PLANNING BOARD
6	03/09/15	TO NYSDOT, NYSDEC,	1	5/27/14	TO ZBA FOR VARIANCE

⅛" ¼" ½" 0 1" 2"
REFERENCE SCALE

UNAUTHORIZED ALTERATION OR ADDITION TO A PLAN BEARING A LICENSED PROFESSIONAL ENGINEER'S SEAL IS A VIOLATION OF SECTION 7209, SUB–DIVISION 2 OF THE N.Y. STATE EDUCATION LAW.

Dig Safely. New York Call 811 before you dig

TOWN OF CHESTER PLANNING BOARD APPROVAL

FELLENZER ENGINEERING LLP
www.fellp.com
22 Mulberry St., Suite 2A, Middletown, NY 10940 t 845-343-1481 fx 845-343-4986
181 Church St., Suite 100, Poughkeepsie, NY 12601 t 845-454-9704 fx 855-320-8735
MARK D. FELLENZER, P.E.
NY PROFESSIONAL ENGINEER NO. 066846–1

PROJECT TITLE:
PRIMO SPORTS COMPLEX
PRELIMINARY SITE PLAN
STATE ROUTE 94 CHESTER, NY 10918

DRAWING TITLE:
SEPTIC TEST DATA

DESIGNED BY:	DRAWN BY:	APPROVED BY PM:	APPROVED BY PIC:	DRAWING #:
RDF	SAR	ACL	MDF	C-502
DATE: 5/27/2014	SCALE: AS SHOWN		F.E. PROJECT #: 14–159	PAGE 10 OF 16

File Name: F:\2014\14-159 Chester Sports Complex\DWG\C-502.dwg (Layout: C-502)
Date: Mon, Nov 16, 2015 - 7:23 AM (Name: sar)

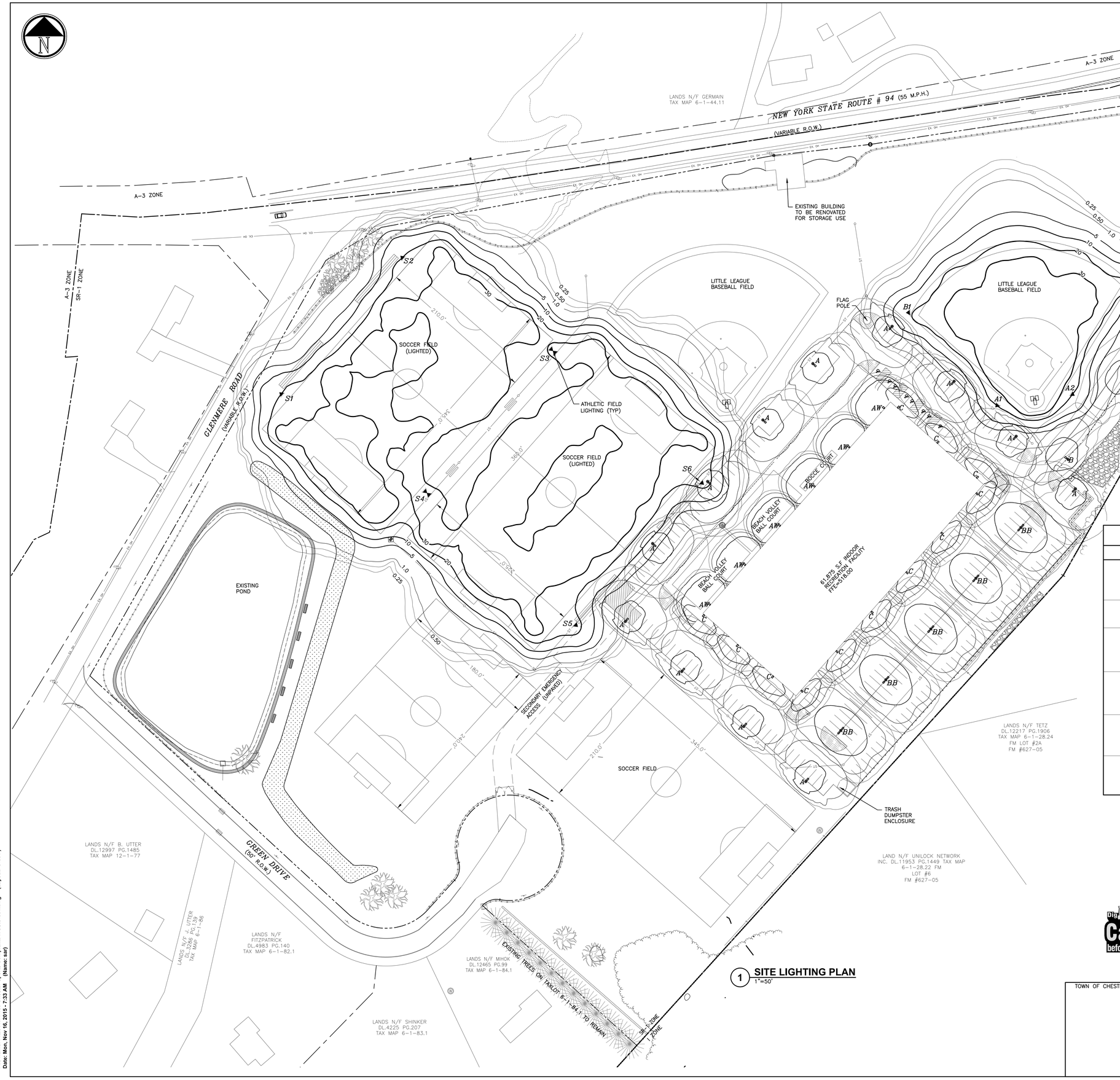

1 **SITE LIGHTING PLAN**
1"=50'

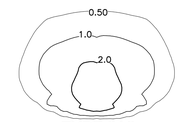

TYPE "A"

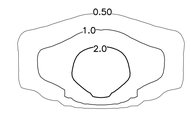

TYPE "B"

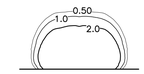

TYPE "AW"

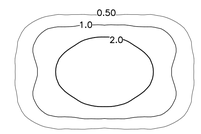

TYPE "BB"

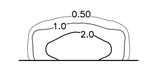

TYPE "C"

2 **ISOLINE DETAILS**
1"=50'

LEGEND & SCHEDULE OF SITE LIGHTING FIXTURES

SYMBOL	MANUFACTURER	MODEL#	DESCRIPTION	LAMP
A	GARDCO	GL18-1-4 255LA-NW-UNIV-BLP-RPA2-277V	GULLWING LED LUMINAIRE WITH ADVANCED LED THERMAL MANAGEMENT TECHNOLOGY. LUMIANIRE SHALL HAVE TYPE 'IV' DISTRIBUTION WITH 4000° KELVIN COLOR TEMPERATURE AND 75 CRI. LUMINAIRE SHALL BE PROVIDED WITH SURGE PROTECTION, 5" ROUND POLE ADAPTER , 277 VOLTS.	255W LED DUAL ARRAY
AW	GARDCO	GL18-WS-4 255LA-NW-UNIV-BLP-277V	SAME AS LUMINAIRE SPECIFIED ABOVE EXCEPT WALL MOUNTED @ 15' A.F.G. 277 VOLTS.	255W LED DUAL ARRAY
B	GARDCO	GL18-1-3 255LA-NW-UNIV-BLP-RPA2-277V	GULLWING LED LUMINAIRE WITH ADVANCED LED THERMAL MANAGEMENT TECHNOLOGY. LUMIANIRE SHALL HAVE TYPE 'III' DISTRIBUTION WITH 4000° KELVIN COLOR TEMPERATURE AND 75 CRI. LUMINAIRE SHALL BE PROVIDED WITH SURGE PROTECTION, 5" ROUND POLE ADAPTER, 277 VOLTS.	255W LED DUAL ARRAY
BB	GARDCO	GL18-2-3 255LA-NW-UNIV-BLP-RPA2-277V	SAME AS TYPE 'B' ABOVE, EXCEPT (2) LUMINAIRES MOUNTED @ 180 DEGREES.	(2) 255W LED DUAL ARRAYS
C	GARDCO	GL18-WS-3 130LA-NW-UNIV-BLP-277V	GULLWING LED LUMINAIRE WITH ADVANCED LED THERMAL MANAGEMENT TECHNOLOGY. LUMIANIRE SHALL HAVE TYPE 'III' DISTRIBUTION WITH 4000° KELVIN COLOR TEMPERATURE AND 75 CRI. LUMINAIRE SHALL BE PROVIDED WITH SURGE PROTECTION, 5" ROUND POLE ADAPTER, 2 LUMINAIRES MOUNTED @ 180 DEGREES, 277 VOLTS.	130W LED ARRAY
A,B	GARDCO	RA5-STB-25M-DX-OC-RAL7015-MSM	25' LENGTH 5" DIAMETER ROUND STRAIGHT ALUMINUM BLACK FINISH POLE WITH STEEL BASE TENON. POLE SHALL BE RATED 4.4 EPA-SQ. FT. FOR A 90 MPH WIND.	---

REV #	DATE	REMARKS:	ISSUE #	DATE	ISSUED FOR:
			5	02/12/15	TO PLANNING BOARD
9	05/11/15	TO PLANNING BOARD	4	10/29/14	TO PLANNING BOARD
8	04/01/15	TO PLANNING BOARD	3	10/07/14	TO ZBA
7	03/13/15	TO ORANGE COUNTY PLANNING	2	7/10/14	TO PLANNING BOARD
6	03/09/15	TO NYSDOT, NYSDEC,	1	5/27/14	TO ZBA FOR VARIANCE

REFERENCE SCALE

UNAUTHORIZED ALTERATION OR ADDITION TO A PLAN BEARING A LICENSED PROFESSIONAL ENGINEER'S SEAL IS A VIOLATION OF SECTION 7209, SUB-DIVISION 2 OF THE N.Y. STATE EDUCATION LAW.

Dig Safely. New York Call 811 before you dig

TOWN OF CHESTER PLANNING BOARD APPROVAL

FELLENZER ENGINEERING LLP
www.fellp.com
22 Mulberry St., Suite 2A,
Middletown, NY 10940
t 845-343-1481 fx 845-343-4986
181 Church St., Suite 100,
Poughkeepsie, NY 12601
t 845-454-9704 fx 855-320-8735
MARK D. FELLENZER, P.E.
NY PROFESSIONAL ENGINEER NO. 065940-1

PROJECT TITLE:
PRIMO SPORTS COMPLEX
PRELIMINARY SITE PLAN
STATE ROUTE 94 CHESTER, NY 10918

DRAWING TITLE: SITE LIGHTING PLAN

DESIGNED BY:	DRAWN BY:	APPROVED BY PM:	APPROVED BY PIC:	DRAWING #:
WPB	SAR	ACL	MDF	C-601
DATE: 5/27/2014	SCALE: AS SHOWN		FE PROJECT #: 14-159	

File Name: F:\2014\14-159 Chester Sports Complex\DWGs\C-601.dwg (Layout: C-601)
Date: Mon, Nov 16, 2015 - 7:33 AM (Name: aef)

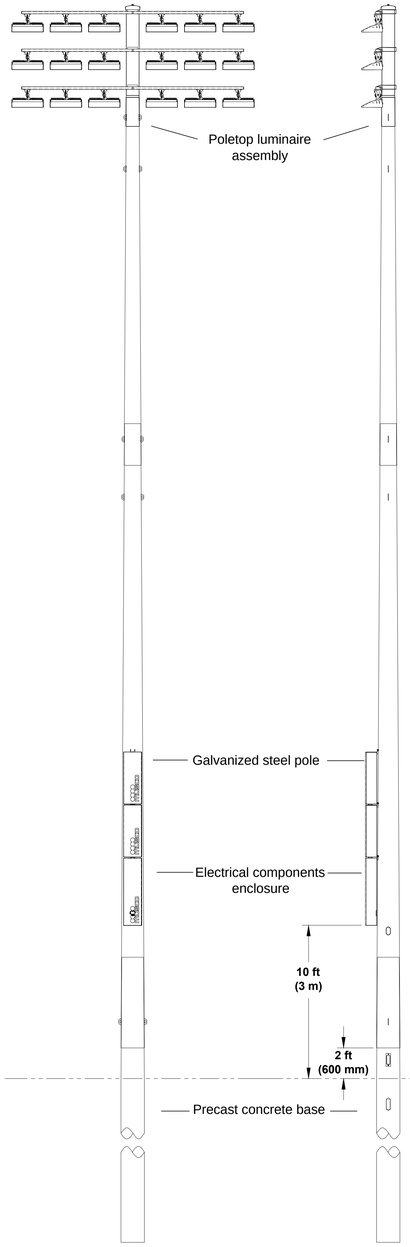

1 **FIELD LIGHT POLES S1, S2**
1/4"=1' 70' "LIGHT STRUCTURE SYSTEM (TM) POLE

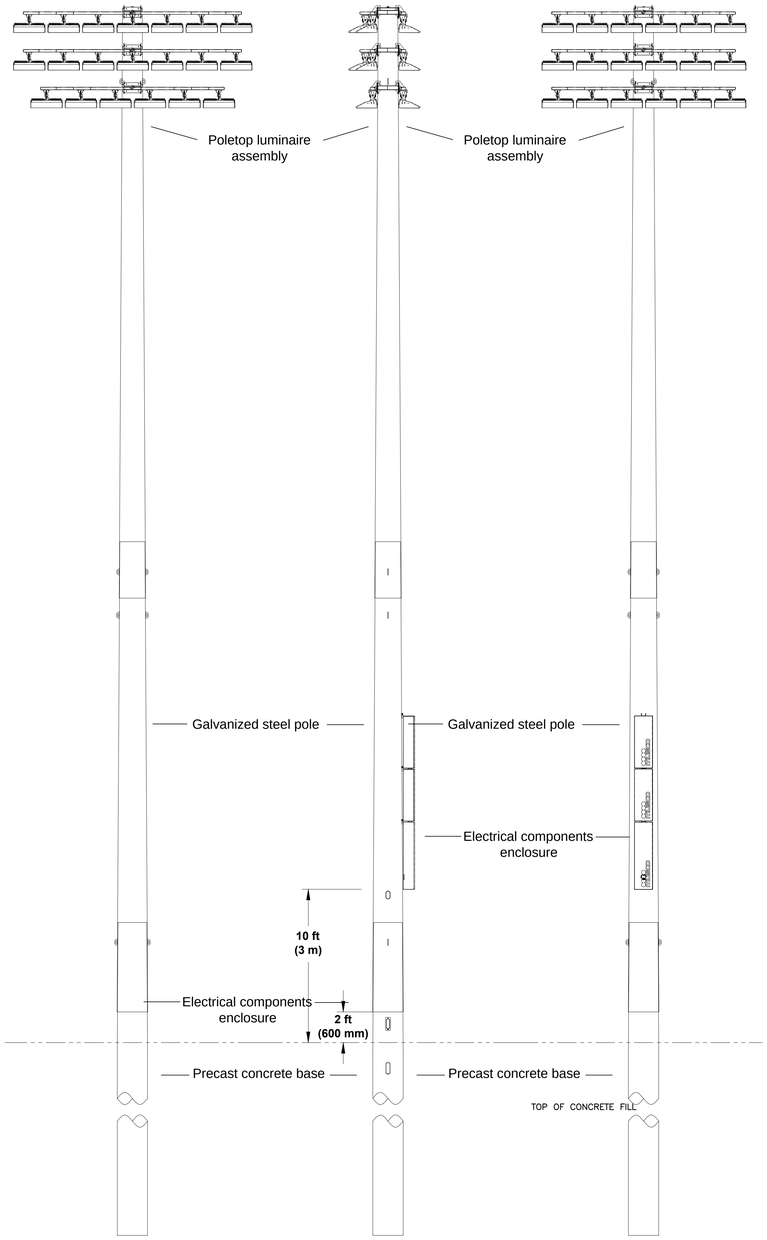

2 **FIELD LIGHT POLES S3, S4**
1/4"=1' 70' "LIGHT STRUCTURE SYSTEM (TM) POLE

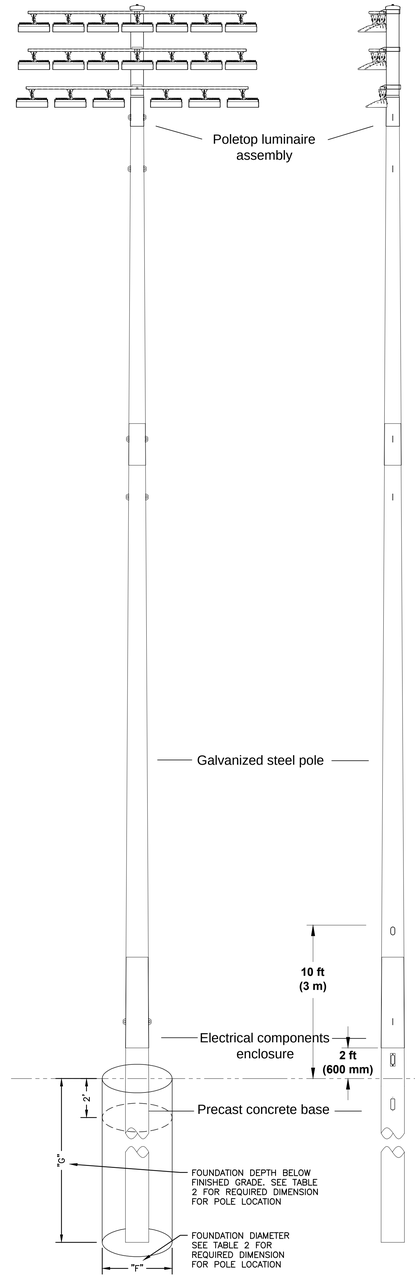

3 **FIELD LIGHT POLES S5, S6**
1/4"=1' 70' "LIGHT STRUCTURE SYSTEM (TM) POLE

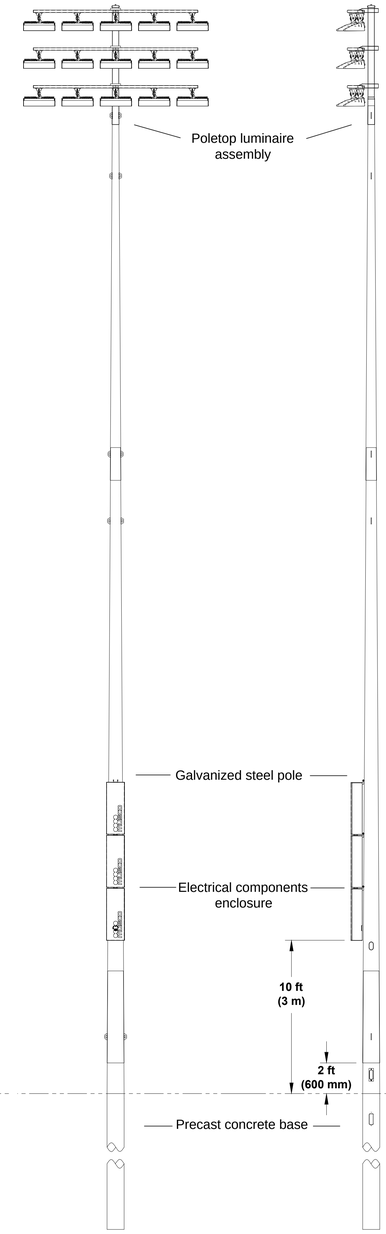

4 **FIELD LIGHT POLES B1,B2**
1/4"=1' 70' "LIGHT STRUCTURE SYSTEM (TM) POLE

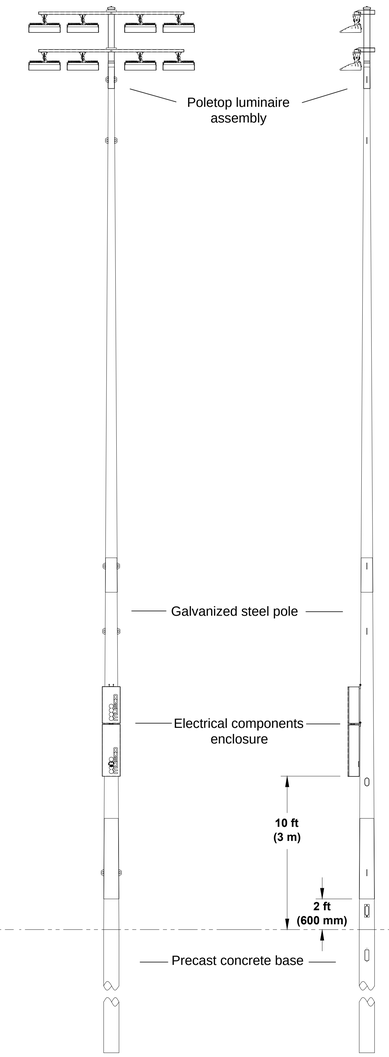

5 **FIELD LIGHT POLES A1, A2**
1/4"=1' 60' "LIGHT STRUCTURE SYSTEM (TM) POLE

TABLE 1

POLE ID	MOUNTING HEIGHT ft (m)	ASSEMBLED POLE WEIGHT 1,2 lb (kg)
A1	60 (18.3)	1767 (802)
A2	60 (18.3)	1896 (860)
B1	70 (21.3)	3746 (1699)
B2	70 (21.3)	3746 (1699)
S1	70 (21.3)	4016 (1822)
S2	70 (21.3)	4016 (1822)
S3	70 (21.3)	7600 (3447)
S4	70 (21.3)	7600 (3447)
S5	70 (21.3)	4196 (1903)
S6	70 (21.3)	4196 (1903)

POLE ASSEMBLY NOTES:

1. STEEL POLE SHOULD OVERLAP CONCRETE BASE AND BE SEATED TIGHT WITH 1 1/2 TON COME-ALONGS (CONTRACTOR PROVIDED).
2. ALIGN WELDMARKS ON STEEL SECTIONS BEFORE ASSEMBLING.
3. ASSEMBLED POLE WEIGHT INCLUDES STEEL SECTIONS, CROSSARMS, LUMINAIRES, AND ELECTRICAL COMPONENTS ENCLOSURES.
4. THIS DOCUMENT IS NOT INTENDED FOR USE AS AN ASSEMBLY INSTRUCTION. SEE INSTALLATION INSTRUCTIONS: LIGHT-STRUCTURE GREEN LIGHTING SYSTEMTM FOR COMPLETE ASSEMBLY PROCEDURE.

NOTE:

ALL LUMINAIRES SHALL BE AS MANUFACTURED BY MUSCO SPORTS LIGHTING, MODEL LED-96-SD-SM-480V, 394 WATT 96 LED ARRAY USING ADVANCED OPTIC CONTROL WITH 5700° KELVIN COLOR TEMPERATURE AND SURGE PROTECTION.

TABLE 2: FOUNDATION DETAILS

POLE ID	CONCRETE BASE WEIGHT lb (kg)	BURIAL INFORMATION 3,4 F in (mm)	G ft (m)	CONCRETE BACKFILL 1,2 p (L:Ratio)	CUT BASE	LIGHTNING GROUND 5 SUPPLEMENTAL TYPE INSTRUCTION
A1	2710 (1229)	30 (762)	12 (3.7)	1.5 (1:1)	NO	INTEGRATED 6
A2	2820 (1279)	30 (762)	12 (3.7)	1.5 (1:1)	NO	INTEGRATED 6
B1	5250 (2381)	30 (762)	16 (4.9)	1.6 (1:2)	NO	INTEGRATED 6
B2	5250 (2381)	30 (762)	16 (4.9)	1.6 (1:2)	NO	INTEGRATED 6
S1	5250 (2381)	30 (762)	16 (4.9)	1.6 (1:2)	NO	INTEGRATED 6
S2	5250 (2381)	30 (762)	16 (4.9)	1.6 (1:2)	NO	INTEGRATED 6
S3	11060 (5017)	42 (1067)	20 (6.1)	4.4 (3:3)	NO	INTEGRATED 6
S4	11060 (5017)	42 (1067)	20 (6.1)	4.4 (3:3)	NO	INTEGRATED 6
S5	5250 (2381)	30 (762)	16 (4.9)	1.6 (1:2)	NO	INTEGRATED 6
S6	5250 (2381)	30 (762)	16 (4.9)	1.6 (1:2)	NO	INTEGRATED 6

FOUNDATION NOTES:

1. CONCRETE BACKFILL IS CALCULATED TO 2 FT (0.6M) BELOW GRADE (NO OVERAGE INCLUDED). TOP 2 FT (0.6M) TO BE CLASS 5 SOIL COMPACTED TO 95% DENSITY OF SURROUNDING UNDISTURBED SOIL UNLESS OTHERWISE SPECIFIED IN STAMPED STRUCTURAL DESIGN.
2. CONCRETE BACKFILL REQUIRED 3000 LB/IN2 (20 MPA) MINIMUM UNLESS OTHERWISE SPECIFIED IN STAMPED STRUCTURAL DESIGN.
3. FOUNDATION DESIGN PER 2009 IBC ,110 MPH ,EXPOSURE CATEGORY C ,VARIATION STD.
4. ASSUMES IBC CLASS 5 SOILS.
5. STANDARD BASES INCLUDE INTEGRATED LIGHTNING PROTECTION. IF BASES ARE CUT, SUPPLEMENTAL LIGHTNING PROTECTION IS REQUIRED.
6. CONTACT MUSCO FOR MATERIALS AND INSTRUCTION.
7. LIGHTNING PROTECTION IS A MANUFACTURER INSTALLED CONCRETE ENCASED ELECTRODE AND CONNECTOR. GROUND CONNECTION IS MADE WHEN CONCRETE BASE IS INSTALLED AND FOOTING IS POURED. NO ADDITIONAL STEPS REQUIRED.

Dig Safely. New York
Call 811 before you dig

TOWN OF CHESTER PLANNING BOARD APPROVAL

REV #	DATE	REMARKS:	ISSUE #	DATE	ISSUED FOR:
			5	02/12/15	TO PLANNING BOARD
9	05/11/15	TO PLANNING BOARD	4	10/29/14	TO PLANNING BOARD
8	04/01/15	TO PLANNING BOARD	3	10/07/14	TO ZBA
7	03/13/15	TO ORANGE COUNTY PLANNING	2	7/10/14	TO PLANNING BOARD
6	03/09/15	TO NYSDOT, NYSDEC,	1	5/27/14	TO ZBA FOR VARIANCE

⅛" ¼" ½" 0 1" 2"
REFERENCE SCALE

UNAUTHORIZED ALTERATION OR ADDITION TO A PLAN BEARING A LICENSED PROFESSIONAL ENGINEER'S SEAL IS A VIOLATION OF SECTION 7209, SUB-DIVISION 2 OF THE N.Y. STATE EDUCATION LAW.

FELLENZER ENGINEERING LLP
www.fellp.com
22 Mulberry St., Suite 2A,
Middletown, NY 10940
t 845-343-1481 fx 845-343-4986
181 Church St., Suite 100,
Poughkeepsie, NY 12601
t 845-454-9704 fx 855-320-8735
MARK D. FELLENZER, P.E.
NY PROFESSIONAL ENGINEER NO. 069846-1

PROJECT TITLE:
PRIMO SPORTS COMPLEX
PRELIMINARY SITE PLAN
STATE ROUTE 94 CHESTER, NY 10918

DRAWING TITLE:
ALTHETIC FIELD LIGHTING DETAILS

DESIGNED BY:	DRAWN BY:	APPROVED BY PM:	APPROVED BY PIC:	DRAWING #:
RDF	SAR	ACL	MDF	C-602
DATE: 5/27/2014	SCALE: AS SHOWN		FE PROJECT #: 14-159	PAGE 12 of 16

File Name: F:\2014\14-159 Chester Sports Complex\DWGs\C-602.dwg (Layout: C-602)
Date: Mon, Nov 16, 2015 - 7:34 AM (Name: sar)

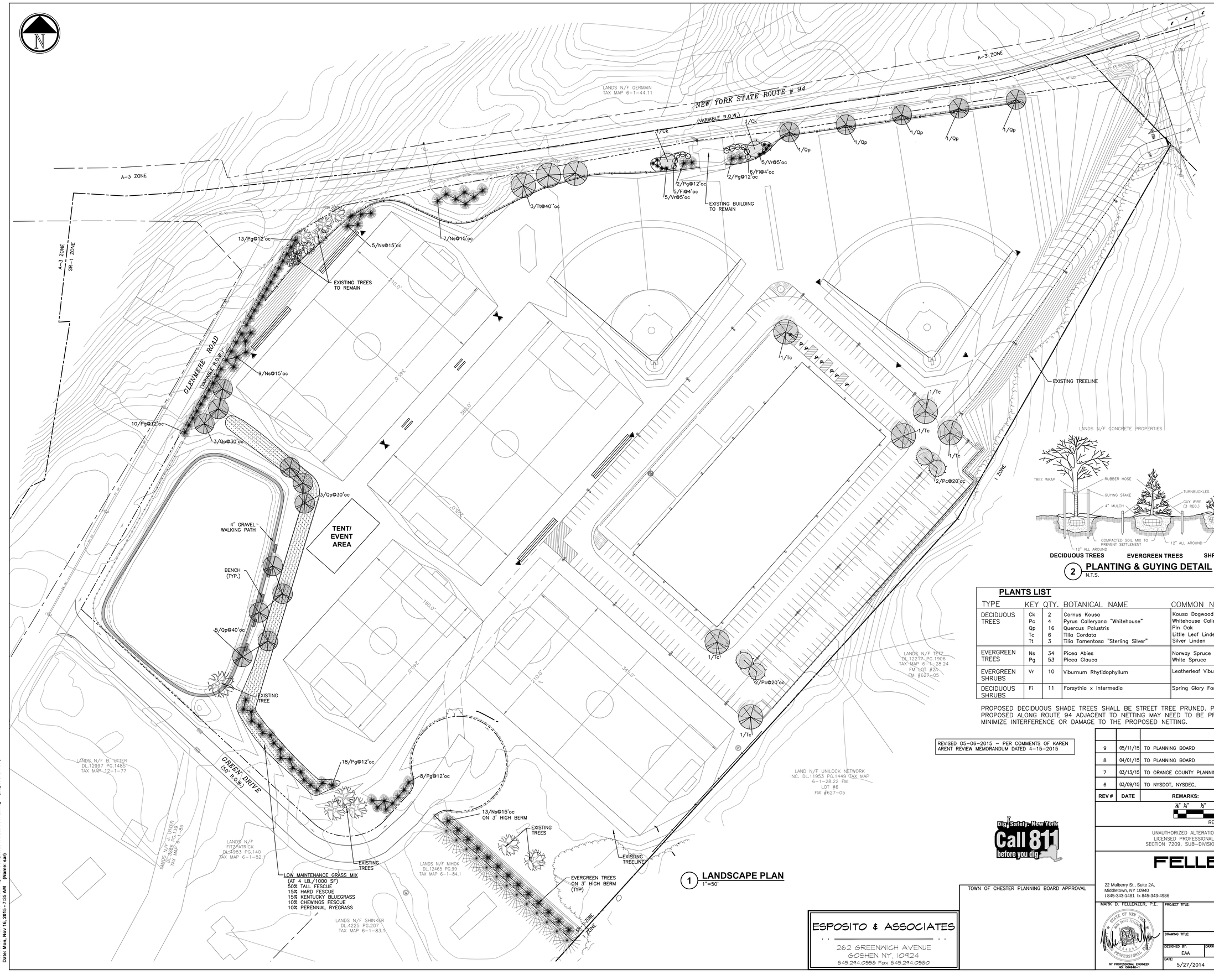

1 **LANDSCAPE PLAN**
1"=50'

PLANTING SCHEDULE

TREES & SHRUBS	SPRING PLANTING	FALL PLANTING
EVERGREEN	APRIL 1 – JUNE 30	SEPT. 1 – OCT. 15
DECIDUOUS	MARCH 1 – JUNE 30	OCT. 1 – DEC. 1

PERMANENT SEEDING SCHEDULE

1. TOPSOIL SHALL BE SPREAD TO A COMPACTED UNIFORM THICKNESS OF 4".
2. TOPSOIL SURFACE SHALL BE FINELY GRADED AND LOOSENED BY MECHANICAL RAKES TO ENSURE SEED ACCEPTANCE AND SEED TO SOIL CONTACT.
3. FERTILIZER SHALL BE APPLIED AT 6 LBS. OF 5-10-10 COMMERCIAL FERTILIZER/1000 SQ. FT.
4. SEEDING SHALL BE INSTALLED AT 5 LBS./1000 SQ. FT. OF:
   60% KENTUCKY BLUE GRASS
   20% CHEWINGS FESCUE
   20% PERENNIAL RYE

GENERAL PLANTING NOTES:

1. PLANT MATERIAL SHALL BE GUARANTEED FOR ONE YEAR AFTER FINAL ACCEPTANCE OF PROJECT PLANTING. DEAD, DYING, UNHEALTHY AND/OR PLANTS IN POOR CONDITION SHALL BE REPLACED IN THE SAME PLANTING SEASON THAT THE LANDSCAPE ARCHITECT HAS DEEMED THE PLANT UNACCEPTABLE. PLANTINGS THAT REQUIRE REPLACEMENT SHALL BE REMOVED AND REPLACED AT NO ADDITIONAL COST TO THE OWNER.
2. EXISTING VEGETATION AREAS DISTURBED BY CONSTRUCTION ACTIVITIES SHALL BE TOPSOILED AND SEEDED UPON COMPLETION OF WORK.
3. NEW PLANTING ROOT BALLS REMOVED FROM CANS SHALL BE SCARIFIED PRIOR TO BACKFILLING THE PLANT.
4. ALL PLANTINGS SHOWN ON APPROVED SITE DEVELOPMENT PLAN OR SPECIAL PERMIT PLAN SHALL BE MAINTAINED IN A VIGOROUS GROWING CONDITION THROUGHOUT THE DURATION OF USE AND PLANTS NOT SO MAINTAINED SHALL BE REPLACED WITH NEW PLANTS AT THE BEGINNING OF THE NEXT IMMEDIATELY FOLLOWING GROWING SEASON.
5. FOR PLANTING OPERATION, STANDARDS AND MATERIALS SEE SPECIFICATIONS.
6. CONTRACTOR SHALL FAMILIARIZE HIM/HERSELF WITH THE LIMITS OF WORK AND EXISTING CONDITIONS AND VERIFY ALL INFORMATION. IF DISCREPANCIES EXIST, CONTRACTOR SHALL NOTIFY OWNER'S REPRESENTATIVE IN WRITING WITHIN SEVEN (7) CALENDAR DAYS OF NOTICE TO PROCEED.
7. CONTRACTOR SHALL VERIFY LOCATIONS OF ALL UNDERGROUND UTILITIES AND OBTAIN AS-BUILT INFORMATION. DRAWINGS WERE PREPARED ACCORDING TO THE BEST INFORMATION AVAILABLE AT THE TIME. CONTRACTOR SHALL NOTIFY OWNER'S REPRESENTATIVE IN WRITING WITHIN SEVEN (7) CALENDAR DAYS OF NOTICE TO PROCEED OF ANY DISCREPANCIES.
8. CONTRACTOR SHALL NOTIFY ALL NECESSARY UTILITY COMPANIES 48 HOURS MINIMUM PRIOR TO DIGGING FOR VERIFICATION OF ALL UNDERGROUND UTILITIES AND OTHER OBSTRUCTIONS AND COORDINATE WITH OWNER'S REPRESENTATIVE IN WRITING PRIOR TO INITIATING OPERATIONS.
9. TYPICALLY, SHRUB AND GROUNDCOVER PLANTINGS ARE SHOWN AS MASS PLANTING BEDS. PLANTS SHALL BE PLACED ON A TRIANGULAR SPACING CONFIGURATION (STAGGERED SPACING). PLANT CENTER TO CENTER DIMENSIONS (O.C.) ARE LISTED ON THE PLANT LIST.
10. CONTRACTOR SHALL FIELD STAKE THE LOCATIONS OF ALL PLANT MATERIAL PRIOR TO INITIATING INSTALLATION FOR THE REVIEW AND APPROVAL OF THE OWNER'S REPRESENTATIVE AND/OR LANDSCAPE ARCHITECT.
11. CONTRACTOR SHALL FIELD ADJUST LOCATION OF PLANT MATERIAL AS NECESSARY TO AVOID DAMAGE TO ALL EXISTING UNDERGROUND UTILITIES AND/OR EXISTING ABOVE GROUND ELEMENTS. ALL CHANGES REQUIRED SHALL BE COMPLETED AT THE CONTRACTOR'S EXPENSE AND SHALL BE COORDINATED WITH THE OWNER'S REPRESENTATIVE AND THE LANDSCAPE ARCHITECT.
12. ALL TREES PLANTED IN LAWN AREA SHALL RECEIVE A 4' DIAMETER MULCH RING AT A DEPTH OF 4" AS PER THE SPECIFICATIONS.
13. PLANT LIST QUANTITIES ARE PROVIDED FOR CONVENIENCE. IN THE EVENT OF QUANTITY DISCREPANCIES, THE DRAWING SHALL TAKE PRECEDENCE. ANY DISCREPANCIES SHALL BE BROUGHT TO THE ATTENTION OF THE LANDSCAPE ARCHITECT.
14. CONTRACTOR SHALL REFER TO THE LANDSCAPE PLANTING DETAILS, PLANT LIST, GENERAL NOTES AND SPECIFICATIONS FOR FURTHER AND COMPLETE INSTRUCTIONS.

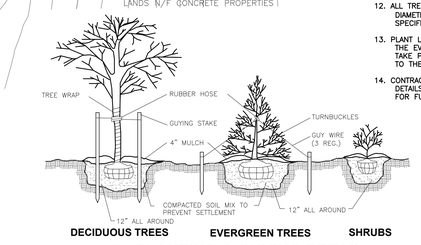

2 **PLANTING & GUYING DETAIL**
N.T.S.

PLANTS LIST

TYPE	KEY	QTY.	BOTANICAL NAME	COMMON NAME	MIN. SIZE	REMARKS
DECIDUOUS TREES	Ck	2	Cornus Kousa	Kousa Dogwood	12'-14'hgt	B&B
	Pc	4	Pyrus Calleryana "Whitehouse"	Whitehouse Callery Pear	2"-2-1/2" c	B&B
	Qp	16	Quercus Palustris	Pin Oak	3"-3-1/2" c	B&B
	Tc	6	Tilia Cordata	Little Leaf Linden	3"-3-1/2" c	B&B
	Tt	3	Tilia Tomentosa "Sterling Silver"	Silver Linden	3"-3-1/2" c	B&B
EVERGREEN TREES	Ns	34	Picea Abies	Norway Spruce	7' – 8' hgt	B&B
	Pg	53	Picea Glauca	White Spruce	7' – 8' hgt	B&B
EVERGREEN SHRUBS	Vr	10	Viburnum Rhytidophyllum	Leatherleaf Viburnum	34"-36"	B&B
DECIDUOUS SHRUBS	Fi	11	Forsythia x Intermedia	Spring Glory Forsythia	34"-36"	B&B

PROPOSED DECIDUOUS SHADE TREES SHALL BE STREET TREE PRUNED. PIN OAKS AND LINDENS PROPOSED ALONG ROUTE 94 ADJACENT TO NETTING MAY NEED TO BE PRUNED IN THE FIELD TO MINIMIZE INTERFERENCE OR DAMAGE TO THE PROPOSED NETTING.

REVISED 05-06-2015 – PER COMMENTS OF KAREN ARENT REVIEW MEMORANDUM DATED 4-15-2015

REV #	DATE	REMARKS:	ISSUE #	DATE	ISSUED FOR:
			5	02/12/15	TO PLANNING BOARD
9	05/11/15	TO PLANNING BOARD	4	10/29/14	TO PLANNING BOARD
8	04/01/15	TO PLANNING BOARD	3	10/07/14	TO ZBA
7	03/13/15	TO ORANGE COUNTY PLANNING	2	7/10/14	TO PLANNING BOARD
6	03/09/15	TO NYSDOT, NYSDEC,	1	5/27/14	TO ZBA FOR VARIANCE

REFERENCE SCALE ⅛" ¼" ½" 0 1" 2"

UNAUTHORIZED ALTERATION OR ADDITION TO A PLAN BEARING A LICENSED PROFESSIONAL ENGINEER'S SEAL IS A VIOLATION OF SECTION 7209, SUB-DIVISION 2 OF THE N.Y. STATE EDUCATION LAW.

Dig Safely. New York Call 811 before you dig

TOWN OF CHESTER PLANNING BOARD APPROVAL

ESPOSITO & ASSOCIATES
262 GREENWICH AVENUE
GOSHEN NY, 10924
845.294.0558 Fax 845.294.0580

FELLENZER ENGINEERING LLP
www.fellp.com
22 Mulberry St., Suite 2A,
Middletown, NY 10940
t 845-343-1481 fx 845-343-4986
181 Church St., Suite 100,
Poughkeepsie, NY 12601
t 845-454-9704 fx 855-320-8735

MARK D. FELLENZER, P.E.
STATE OF NEW YORK · MARK DAVID FELLENZER · 064940 · PROFESSIONAL ENGINEER
NY PROFESSIONAL ENGINEER NO. 064940-1

PROJECT TITLE:
PRIMO SPORTS COMPLEX
PRELIMINARY SITE PLAN
STATE ROUTE 94 CHESTER, NY 10918

DRAWING TITLE:
LANDSCAPE PLAN

DESIGNED BY:	DRAWN BY:	APPROVED BY: PM:	APPROVED BY: PIC:	DRAWING #:
EAA	SAR	ACL	MDF	C-701
DATE: 5/27/2014	SCALE: AS SHOWN		FE PROJECT #: 14-159	PAGE 13 OF 16

File Name: F:\2014\14-159 Chester Sports Complex\DWGs\C-701FE.dwg (Layout: C-701)
Date: Mon, Nov 16, 2015 - 7:35 AM (Name: aef)

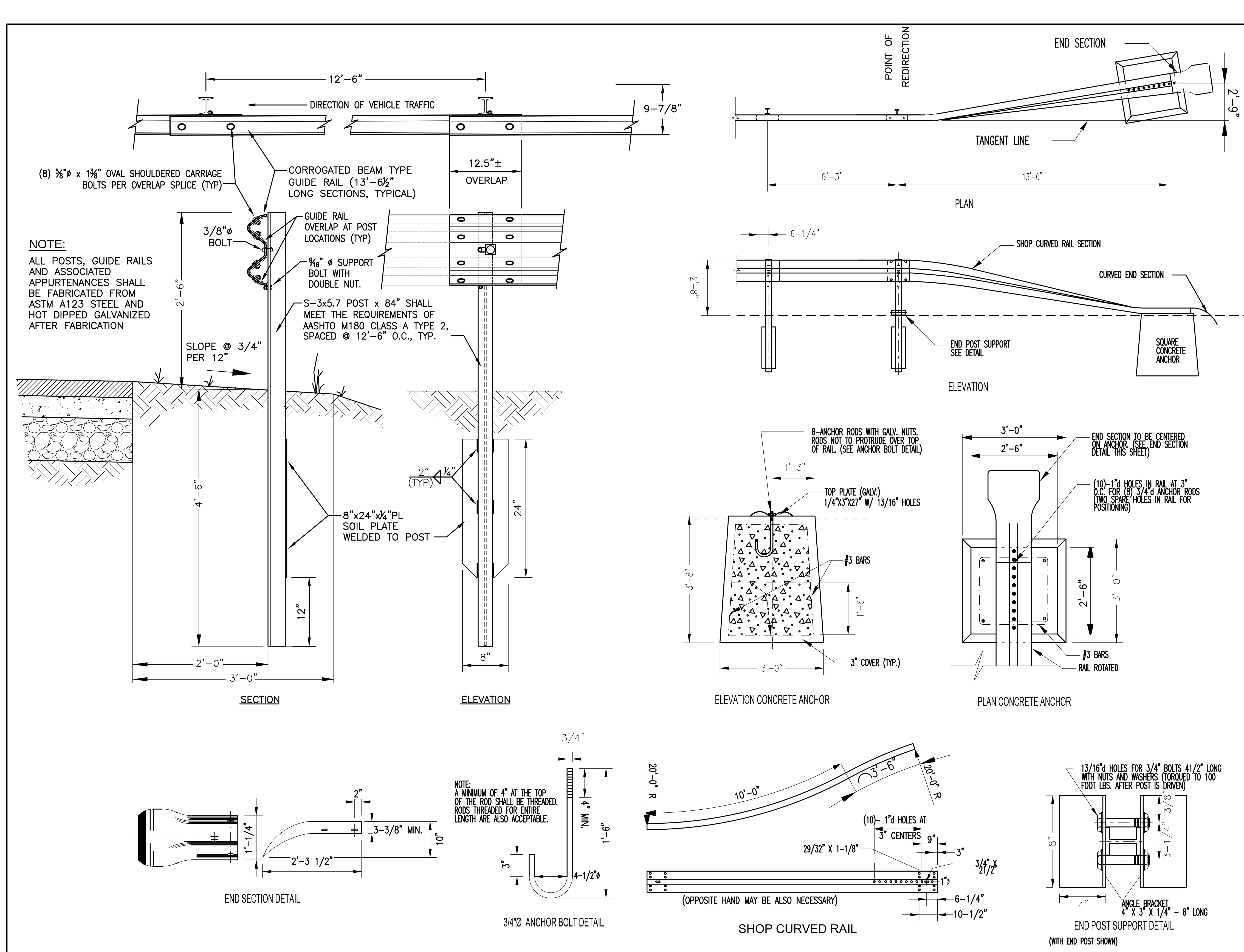

1 CORRUGATED TYPE GUIDE RAIL DETAIL
N.T.S. (ENTRY ROAD & RETAINING WALL LOCATIONS)

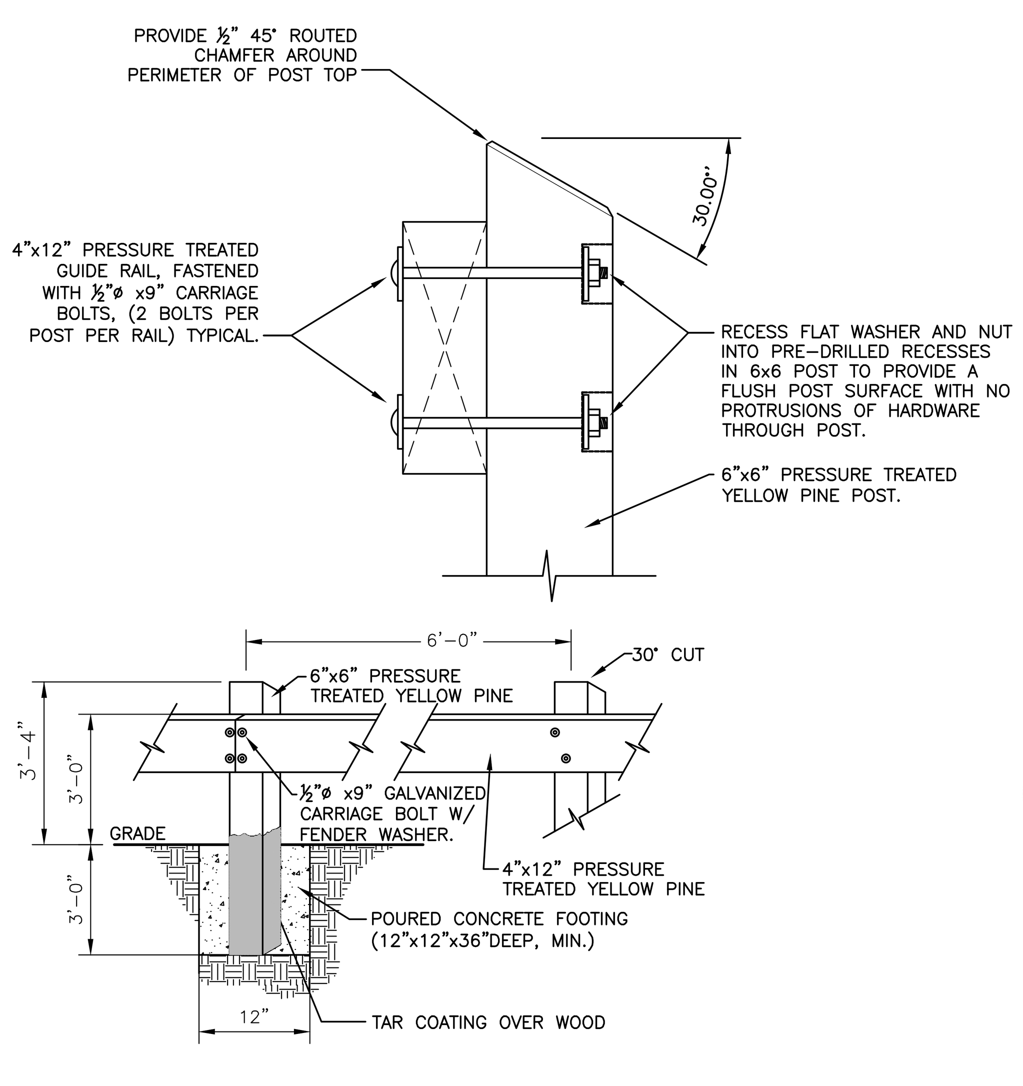

2 HEAVY TIMBER GUIDE RAIL DETAIL
N.T.S. (PATIO & SAND COURT LOCATIONS ONLY)

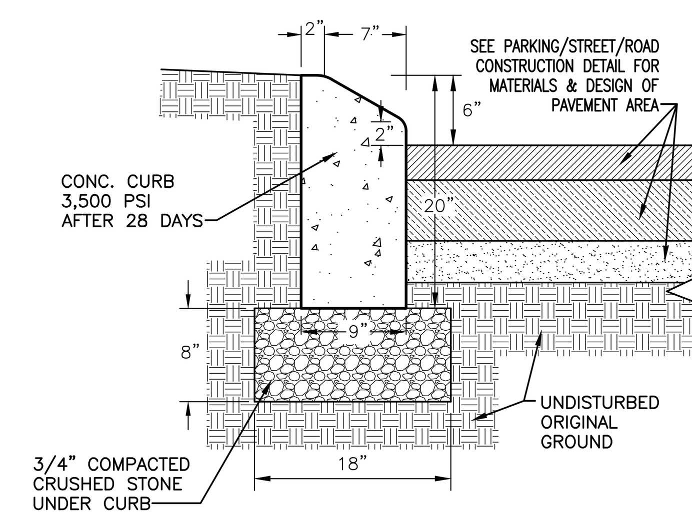

3 MOUNTABLE CONCRETE CURB
N.T.S.

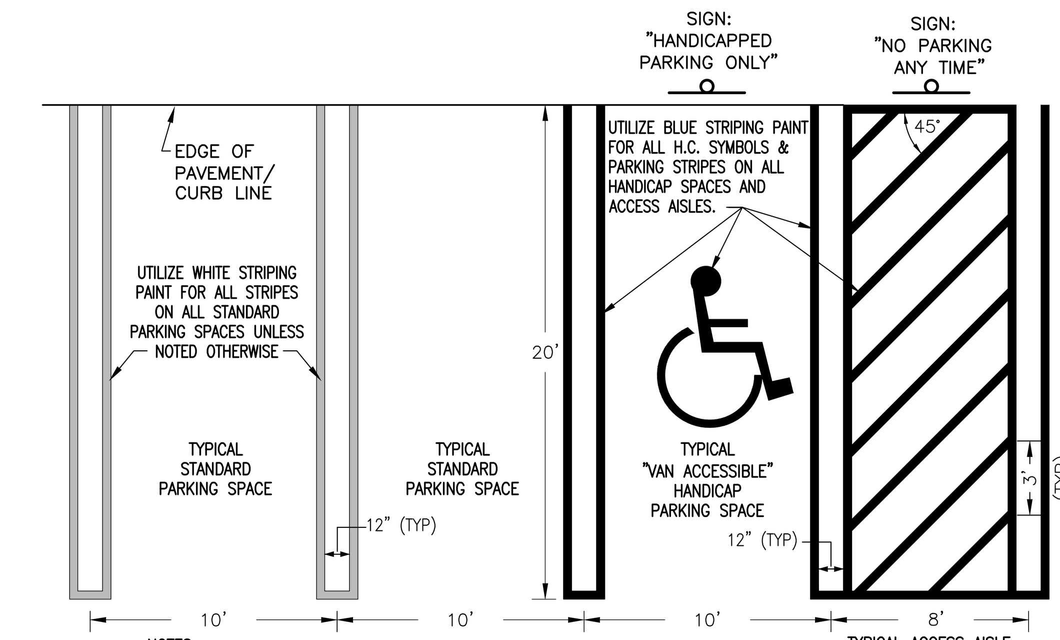

NOTES:
1. ALL PARKING AREAS TO BE RESTRIPED AT LEAST ONCE A YEAR.
2. ALL STRIPING TO BE 4" WIDE UNLESS NOTED OTHERWISE.
3. SEE SIGN DETAILS FOR SIGN MOUNTING AND SIGN HEIGHT REQUIREMENTS.
4. AT LEAST 1 (ONE) SPACE OF EVERY 8 (EIGHT) REQUIRED HANDICAP SPACES SHALL BE "VAN ACCESSIBLE", WITH A MINIMUM REQUIREMENT OF 1 (ONE) "VAN ACCESSIBLE" SPACE, IF LESS THAN 8 HANDICAP SPACES ARE REQUIRED.

4 VAN ACCESSIBLE HANDICAP PARKING - STRIPING DETAIL
N.T.S.

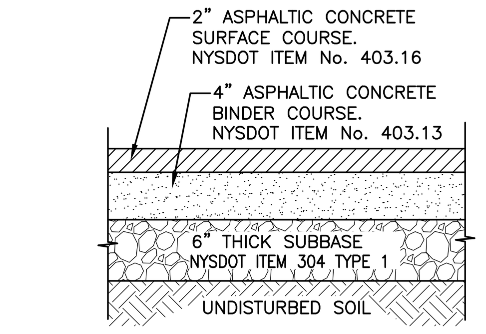

5 PARKING AREAS ASPHALTIC PAVEMENT DETAIL
N.T.S.

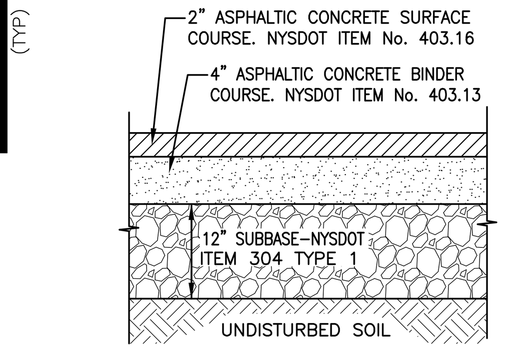

6 ENTRY ROAD ASPHALTIC PAVEMENT DETAIL
N.T.S.

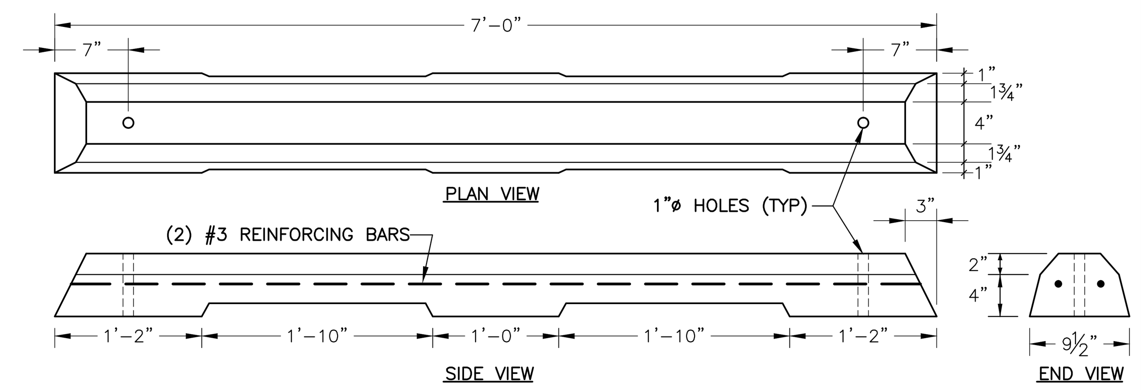

7 CONCRETE BUMPER BLOCK DETAIL
N.T.S.

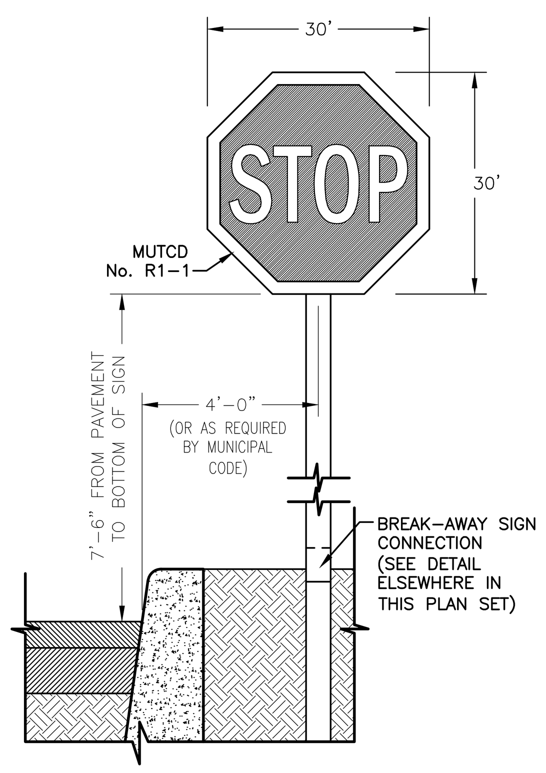

8 STOP SIGN PARKING LOT INSTALLATION DETAIL
N.T.S.

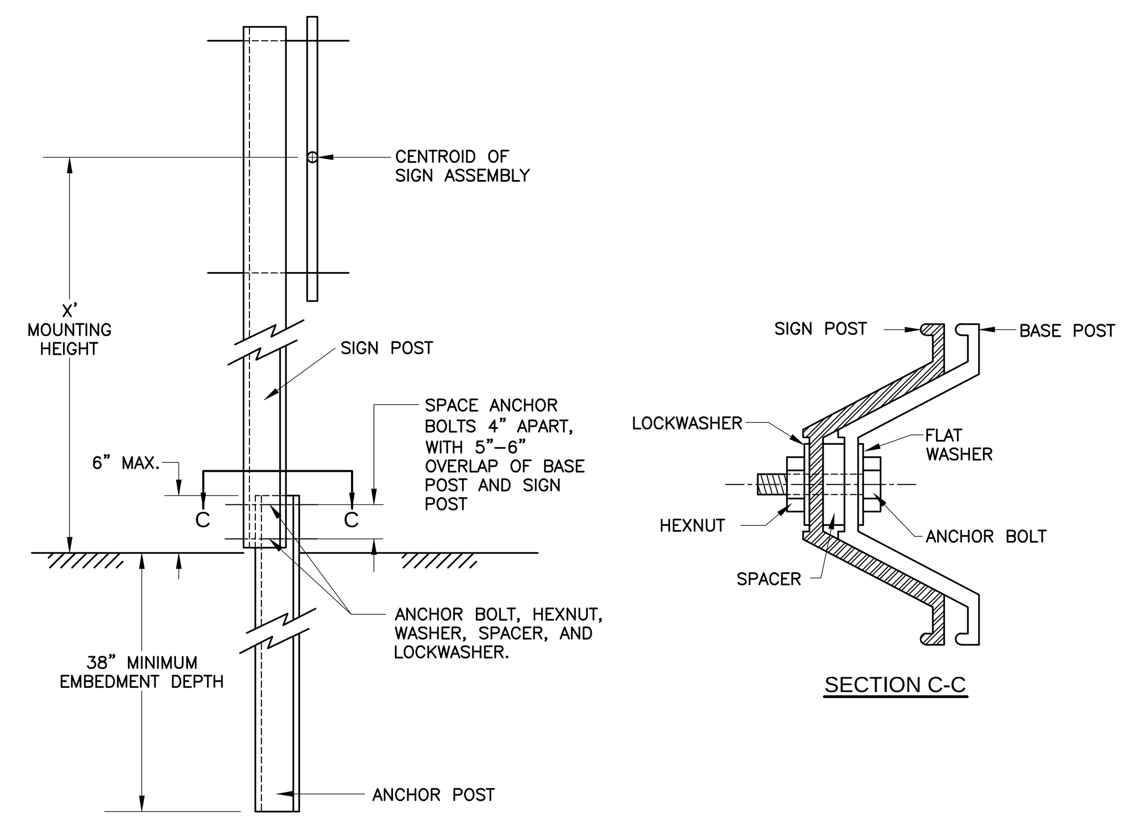

9 BREAKAWAY STYLE SIGN POST DETAIL
N.T.S.

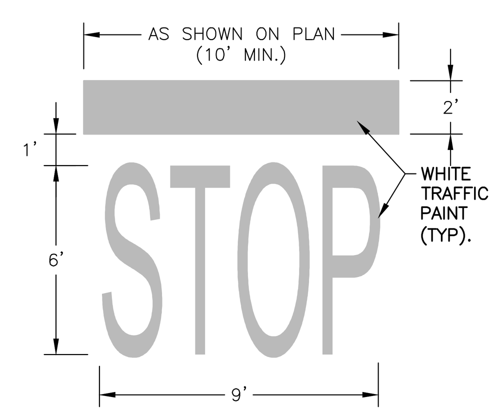

NOTE:
1. STOP BAR & LETTERS TO BE REPAINTED A MINIMUM OF ONCE PER YEAR.

10 'STOP' PAVEMENT MARKING DETAIL
N.T.S.

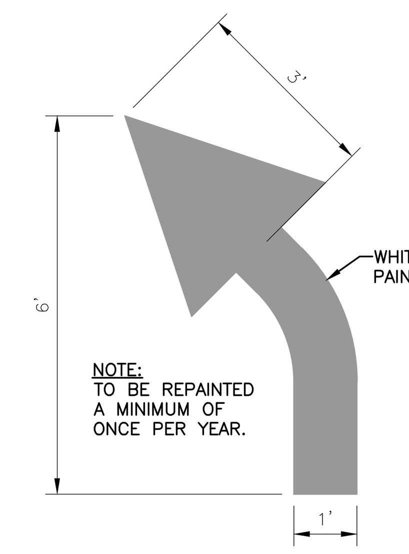

11 LEFT DIRECTIONAL ARROW PAVEMENT MARKING DETAIL
N.T.S.

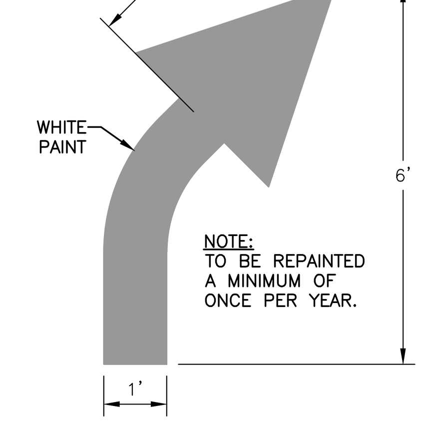

12 RIGHT DIRECTIONAL ARROW PAVEMENT MARKING DETAIL
N.T.S.

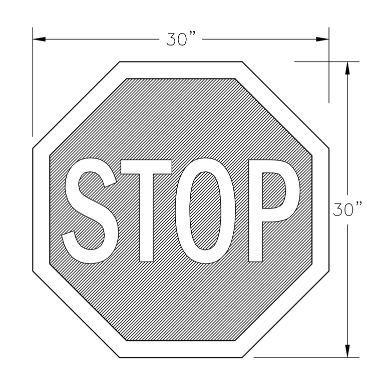

13 STOP SIGN
N.T.S. (MUTCD No. R1-1)

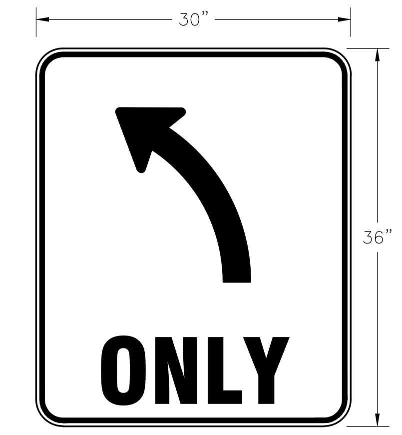

14 LEFT TURN ONLY LANE CONTROL SIGN
N.T.S. (MUTCD No. R3-5)

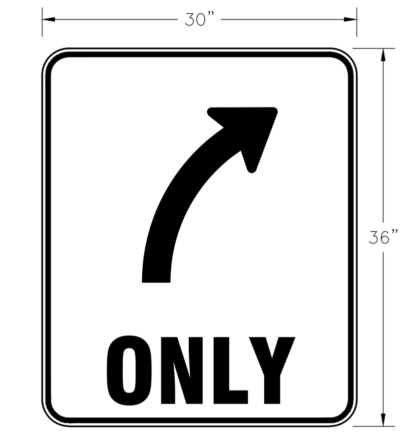

15 RIGHT TURN ONLY LANE CONTROL SIGN
N.T.S. (MUTCD No. R3-5)

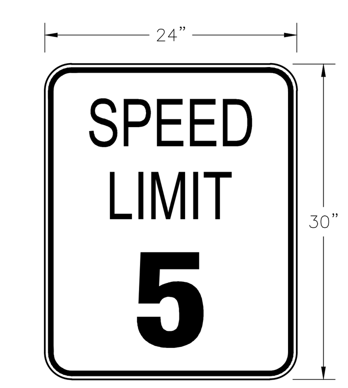

16 SPEED LIMIT SIGN
N.T.S. (MUTCD No. R2-1)

17 NO PARKING ANYTIME SIGN (WITH ARROWS)
N.T.S.

LETTERING: GREEN
BORDER: BLUE
SYMBOL: WHITE WITH BLUE FIELD
SIGN BACKGROUND: REFLECTIVE WHITE

18 HANDICAP RESERVED PARKING SIGN
N.T.S.

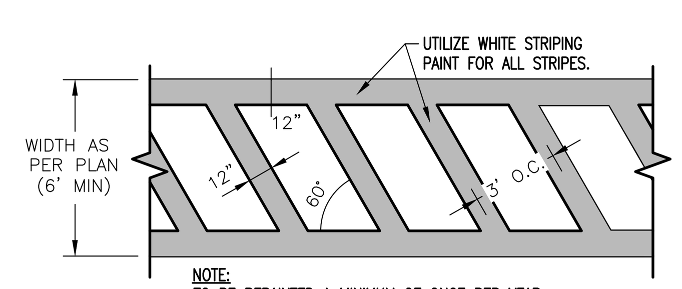

NOTE:
TO BE REPAINTED A MINIMUM OF ONCE PER YEAR

19 CROSSWALK STRIPING DETAIL
N.T.S.

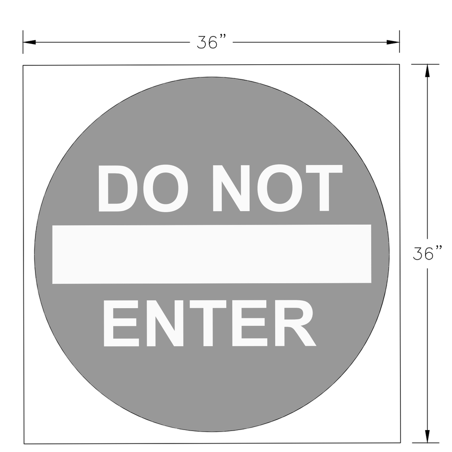

20 DO NOT ENTER
N.T.S. (MUTCD No. R3-15)

21 NO PARKING ANYTIME SIGN
N.T.S.

Dig Safely. New York Call 811 before you dig

REV #	DATE	REMARKS:	ISSUE #	DATE	ISSUED FOR:
			5	02/12/15	TO PLANNING BOARD
9	05/11/15	TO PLANNING BOARD	4	10/29/14	TO PLANNING BOARD
8	04/01/15	TO PLANNING BOARD	3	10/07/14	TO ZBA
7	03/13/15	TO ORANGE COUNTY PLANNING	2	7/10/14	TO PLANNING BOARD
6	03/09/15	TO NYSDOT, NYSDEC,	1	5/27/14	TO ZBA FOR VARIANCE

⅛" ¼" ½" 0 1" 2"
REFERENCE SCALE

UNAUTHORIZED ALTERATION OR ADDITION TO A PLAN BEARING A LICENSED PROFESSIONAL ENGINEER'S SEAL IS A VIOLATION OF SECTION 7209, SUB-DIVISION 2 OF THE N.Y. STATE EDUCATION LAW.

FELLENZER ENGINEERING LLP
www.fellp.com
22 Mulberry St., Suite 2A, Middletown, NY 10940
t 845-343-1481 fx 845-343-4986
181 Church St., Suite 100, Poughkeepsie, NY 12601
t 845-454-9704 fx 855-320-8735
MARK D. FELLENZER, P.E.
STATE OF NEW YORK · MARK DAVID FELLENZER · 064946 · LICENSED PROFESSIONAL ENGINEER
NY PROFESSIONAL ENGINEER NO. 064946-1

TOWN OF CHESTER PLANNING BOARD APPROVAL

PROJECT TITLE:
PRIMO SPORTS COMPLEX
PRELIMINARY SITE PLAN
STATE ROUTE 94 CHESTER, NY 10918

DRAWING TITLE: DETAILS

DESIGNED BY:	DRAWN BY:	APPROVED BY PM:	APPROVED BY PIC:	DRAWING #:
RDF	SAR	ACL	MDF	C-901
DATE: 5/27/2014	SCALE: AS SHOWN	FE PROJECT #: 14-159		PAGE 14 OF 16

File Name: F:\2014\14-159 Chester Sports Complex\DWGs\C-901.dwg (Layout: C-901)
Date: Mon, Nov 16, 2015 - 7:35 AM (Name: sar)

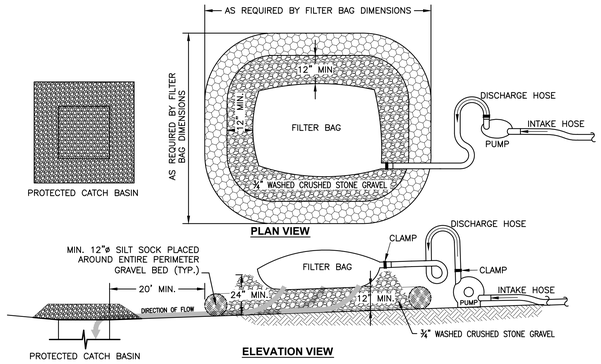

NOTES:

1. FILTER BAGS SHALL BE MADE FROM NON-WOVEN GEO-TEXTILE MATERIAL SEWN WITH HIGH STRENGTH DOUBLE STITCHED "J" TYPE SEAMS. THEY SHALL BE CAPABLE OF TRAPPING PARTICLES LARGER THAN 150 MICRONS.
2. A SUITABLE MEANS OF ACCESSING THE BAG WITH MACHINERY REQUIRED FOR DISPOSAL PURPOSES MUST BE PROVIDED. FILTER BAGS SHALL BE REPLACED WHEN THEY BECOME ½ FULL. SPARE BAGS SHALL BE KEPT AVAILABLE FOR REPLACEMENT OF THOSE THAT HAVE FAILED OR ARE FILLED.
3. BAGS SHALL BE LOCATED ON GRAVEL BEDS CONSTRUCTED OF A MINIMUM THICKNESS OF 12" OF ¾" WASHED CRUSHED STONE GRAVEL, LOCATED A MINIMUM OF 20' FROM ANY DRAINAGE STRUCTURE RECEIVING THE WATER FROM THE DEWATERING PROCESS, SUCH DRAINAGE STRUCTURE ALSO BEING PROTECTED AS REQUIRED AND SHOWN IN DETAILS ELSEWHERE IN THESE PLANS. BAGS SHALL NOT BE PLACED ON SLOPES GREATER THAN 5%.
4. THE PUMP DISCHARGE HOSE SHALL BE INSERTED INTO THE BAGS IN THE MANNER SPECIFIED BY THE MANUFACTURER AND SECURELY CLAMPED.
5. THE PUMPING RATE SHALL BE NO GREATER THAN 750 GPM OR ½ THE MAXIMUM SPECIFIED BY THE MANUFACTURER, WHICHEVER IS LESS. PUMP INTAKES SHOULD BE FLOATING AND SCREENED.
6. SILT SOCKS SHALL BE "SILTSOXX" AS MANUFACTURED BY FILTREXX, INC. OR APPROVED EQUAL.
7. FILTER BAGS SHALL BE INSPECTED DAILY. IF ANY PROBLEM IS DETECTED, PUMPING SHALL CEASE IMMEADIATELY AND NOT RESUME UNTIL THE PROBLEM IS CORRECTED.

1 DEWATERING - FILTER BAG DETAIL
N.T.S.

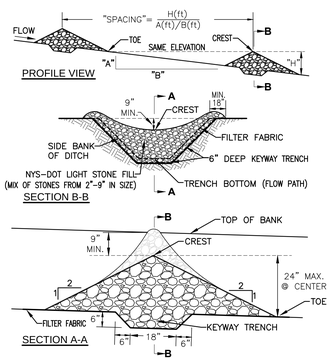

1. STONE SHALL BE PLACED ON A FILTER FABRIC FOUNDATION AT THE LINES, GRADES AND LOCATIONS AS SHOWN ON THE PLAN.
2. SPACING OF CHECK DAMS SHALL BE SET SO THAT THE ELEVATION OF THE CREST OF A DOWNSTREAM DAM IS AT THE SAME ELEVATION OF THE TOE OF THE DAM UPSTREAM FROM IT.
3. STONE SHALL BE EXTENDED A MINIMUM OF 1.5 FEET BEYOND THE DITCH BANKS TO PREVENT DRAINAGE FLOW FROM CUTTING AROUND THE DAM.
4. THE CHANNEL DOWNSTREAM OF THE LOWEST CHECK DAM SHALL BE PROTECTED FROM SCOUR AND EROSION BY USE OF STONE OR LINER AS APPROPRIATE.
5. ENSURE THAT CHANNEL APPURTENANCES SUCH AS CULVERT ENTRANCES BELOW CHECK DAMS ARE NOT SUBJECT TO DAMAGE OR BLOCKAGE FROM DISPLACED STONE.
6. MAXIMUM DRAINAGE AREA 2 ACRES.

2 CHECK DAM DETAIL
N.T.S.

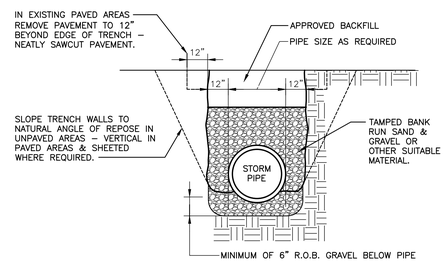

3 TYPICAL TRENCH - STORM DRAINAGE
N.T.S.

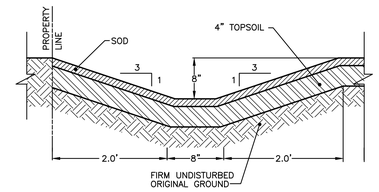

4 TYPICAL SWALE CROSS SECTION
N.T.S.

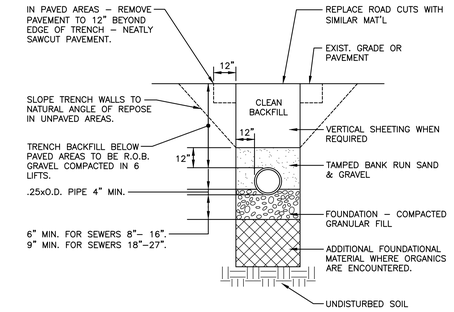

5 TYPICAL TRENCH - SEWER LINE
N.T.S.

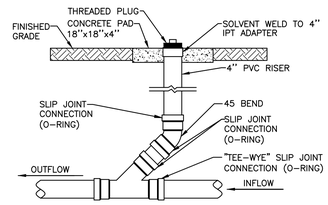

6 4" CLEANOUT DETAIL
N.T.S.

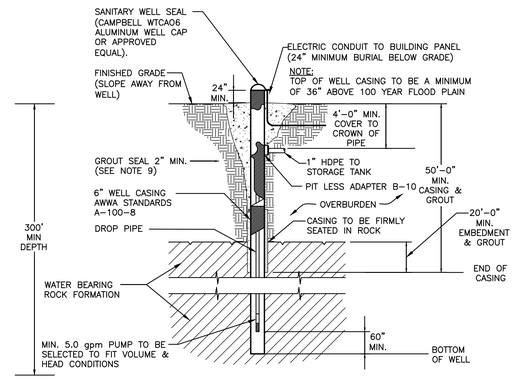

7 DRILLED WELL DETAIL
N.T.S.

NOTES:

1. WELL IS TO BE CASED AND GROUTED FOR A MINIMUM OF 40' IN LENGTH.
2. OVERSIZE DRILL HOLE (FOR GROUTING) TO BE 10" IN DIAMETER AND A MIN. OF 40' IN LENGTH.
3. WELL CASING TO CONFORM TO TEN STATE STANDARD LATEST EDITION.
4. PIT LESS ADAPTER SHALL BE A CAMPBELL MODEL B-10, BRONZE ADAPTER AND THE WELL SEAL SHALL BE A SEAL MODEL WTCA06 ALUMINUM CAP.
5. DISCHARGE PIPE: C901-96 AWWA STANDARD FOR POLYETHYLENE (PE) PRESSURE TREATED PIPE AND TUBING, ½" THROUGH 3".
6. WATER SERVICE LINES UNDER PRESSURE SHALL NOT PASS CLOSER THEN 10' TO A SEPTIC TANK, TILE FIELD OR ANY OTHER PART OF A SEWAGE DISPOSAL SYSTEM.
7. CAST IRON PIPES WITH LEAD CAULKED JOINTS ARE REQUIRED FOR SEWAGE LINES WITHIN 50' OF ANY WELL.
8. MINIMUM WELL YIELD TO BE 5.0 GPM.
9. CEMENT GROUT SHALL BE A MIXTURE OF 1 BAG OF CEMENT (94 lbs.) AND 5-5½ GALLONS OF CLEAN WATER
10. ELECTRICAL WORK SHALL BE INSTALLED IN STRICT ACCORDANCE WITH THE REQUIREMENTS OF THE NYS BUILDING CODE.
11. CONSTRUCTION SHALL CONFORM TO THE REQUIREMENTS AS SET FORTH IN THE PUBLICATION "RURAL WATER SUPPLY", NYS DEPT. OF HEALTH. LATEST EDITION.
12. THE PUMP SELECTED MUST BE CAPABLE OF DELIVERING A MINIMUM OF 5.0 GALLONS PER MINUTE.
13. THE WELL CASING SHALL EXTEND A MINIMUM OF 24" ABOVE THE FINAL GROUND ELEVATION AND NOT LESS THAN 36" ABOVE THE 100 YEAR FLOOD LEVEL.

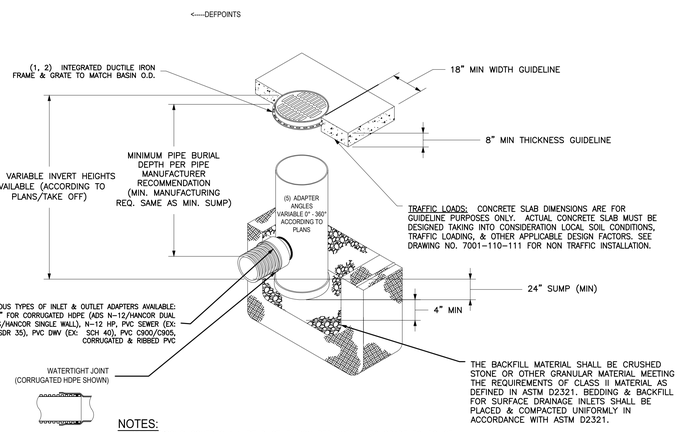

NOTES:

1. GRATES/SOLID COVER SHALL BE DUCTILE IRON PER ASTM A536 GRADE 70-50-05.
2. FRAMES SHALL BE DUCTILE IRON PER ASTM A536 GRADE 70-50-05
3. DRAIN BASIN TO BE CUSTOM MANUFACTURED ACCORDING TO PLAN DETAILS.
4. RISERS ARE NEEDED FOR BASINS OVER 84" DUE TO SHIPPING RESTRICTIONS. SEE DRAWING NO. 7001-110-065
5. DRAINAGE CONNECTION STUB JOINT TIGHTNESS SHALL CONFORM TO ASTM D3212 FOR CORRUGATED HDPE (ADS N-12/HANCOR DUAL WALL), N-12 HP & PVC SEWER.
6. ADAPTERS CAN BE MOUNTED ON ANY ANGLE 0° TO 360°. TO DETERMINE MINIMUM ANGLE BETWEEN ADAPTERS SEE DRAWING NO. 7001-110-012.

Nyloplast
3130 VERONA AVE
BUFORD, GA 30518
PHN (770) 932-2443
FAX (770) 932-2490
www.nyloplast-us.com

8 NYOPLAST CATCH BASIN DETAIL
N.T.S.

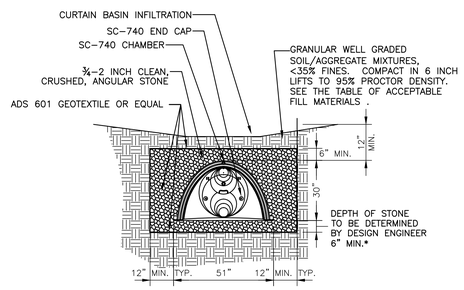

9 STORMTECH CHAMBERS CROSS SECTION
N.T.S.

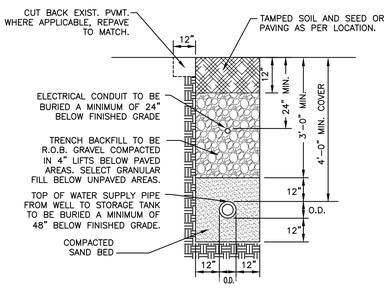

10 WELL SUPPLY - TRENCH DETAIL
N.T.S.

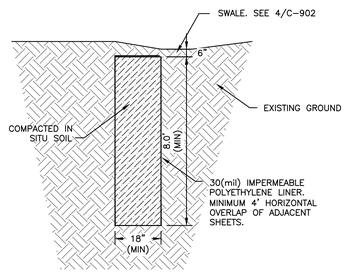

11 SUBSURFACE BARRIER
N.T.S.

REV #	DATE	REMARKS:	ISSUE #	DATE	ISSUED FOR:
			5	02/12/15	TO PLANNING BOARD
9	05/11/15	TO PLANNING BOARD	4	10/29/14	TO PLANNING BOARD
8	04/01/15	TO PLANNING BOARD	3	10/07/14	TO ZBA
7	03/13/15	TO ORANGE COUNTY PLANNING	2	7/10/14	TO PLANNING BOARD
6	03/09/15	TO NYSDOT, NYSDEC,	1	5/27/14	TO ZBA FOR VARIANCE

⅛" ¼" ½" 0 1" 2"
REFERENCE SCALE

UNAUTHORIZED ALTERATION OR ADDITION TO A PLAN BEARING A LICENSED PROFESSIONAL ENGINEER'S SEAL IS A VIOLATION OF SECTION 7209, SUB-DIVISION 2 OF THE N.Y. STATE EDUCATION LAW.

Dig Safely. New York Call 811 before you dig

TOWN OF CHESTER PLANNING BOARD APPROVAL

FELLENZER ENGINEERING LLP
www.fellp.com
22 Mulberry St., Suite 2A, Middletown, NY 10940
t 845-343-1481 fx 845-343-4986
181 Church St., Suite 100, Poughkeepsie, NY 12601
t 845-454-9704 fx 855-320-8735
MARK D. FELLENZER, P.E.
STATE OF NEW YORK · MARK DAVID FELLENZER · 084944 · LICENSED PROFESSIONAL ENGINEER
NY PROFESSIONAL ENGINEER NO. 084944-1

PROJECT TITLE:
PRIMO SPORTS COMPLEX
PRELIMINARY SITE PLAN
STATE ROUTE 94 CHESTER, NY 10918

DRAWING TITLE: DETAILS

DESIGNED BY:	DRAWN BY:	APPROVED BY PM:	APPROVED BY PIC:	DRAWING #:
RDF	SAR	ACL	MDF	C-902
DATE: 5/27/2014	SCALE: AS SHOWN		FE PROJECT #: 14-159	PAGE 15 OF 16

File Name: F:\2014\14-159 Chester Sports Complex\DWGs\C-902.dwg (Layout: C-702)
Date: Mon, Nov 16, 2015 - 7:35 AM (Name: sar)

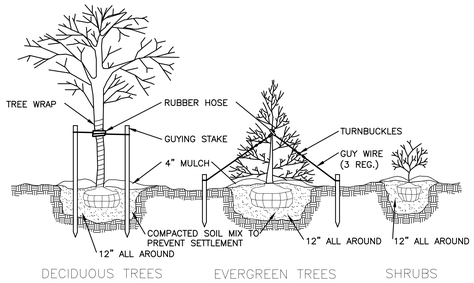

1 PLANTING AND GUYING DETAIL
N.T.S.

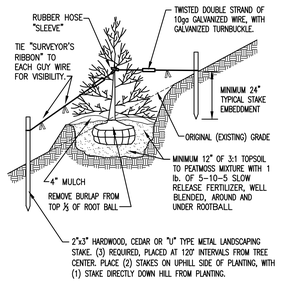

2 SLOPE PLANTING AND GUYING DETAIL
N.T.S.

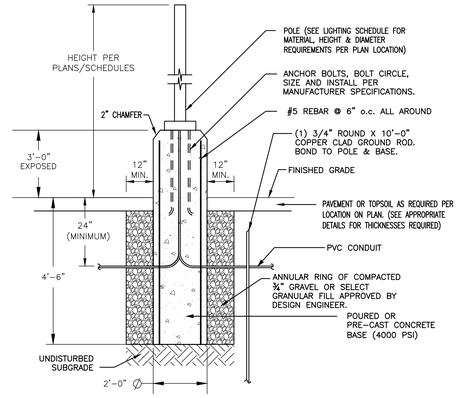

3 PARKING AREA PRE-CAST CONCRETE LIGHT POLE DETAIL
N.T.S.

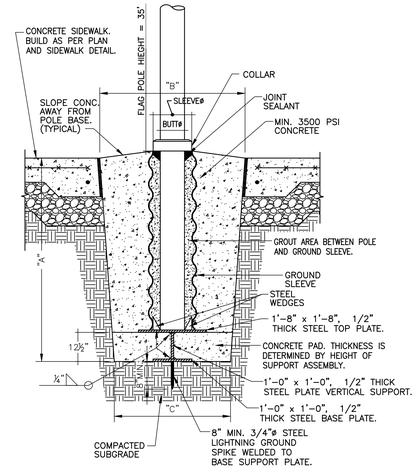

HEIGHT	BUTT DIAMETER	SLEEVE DIAMETER	DEPTH "A"	TOP "B"	BOTTOM "C"
35'-0"	7"	10"	4'-0"	3'-0"	2'-6"

4 FLAGPOLE BASE DETAIL
N.T.S.

LAWN RESTORATION SCHEDULE & NOTES

	SPECIES	LBS / 1,000 SQFT
PERMANENT SEED MIXTURE	TALL FESCUE	1
	KENTUCKY BLUEGRASS	3
	PERENNIAL RYEGRASS	1

NOTE: OPTIMUM PERMANENT SEEDING SCHEDULE: SPRING OR EARLY FALL

1. REMOVE ALL DEBRIS (STICKS, STONES, ETC.) FROM AREA, AND PREPARE SOIL BY TILLING TO A 3"-4" DEPTH.
2. RAKE SURFACE LEVEL TO PREVENT WATER FROM POOLING IN ONE AREA. AREAS LOCATED ON A SLOPE SHALL BE RAKED PARALLEL WITH CONTOURS TO PREVENT MOISTURE RUN-OFF.
3. FERTILIZER SHALL BE APPLIED TO THE TILLED SOIL AT RATE OF 6 LBS. PER 1,000 sq.ft. FERTILIZER SHALL BE A COMMERCIAL 10-0-10 MIXTURE.
4. AREA SHALL BE LIGHTLY SPRAYED WITH WATER TO ALLOW SOIL TO SETTLE.
5. PERMANENT SEED MIXTURE SHALL BE SPREAD BY HAND, LAWN SPREADER OR MECHANICAL SEEDER (AS APPROPRIATE FOR SIZE OF AREA) AT A RATE OF 5 lbs. OF SEED MIXTURE PER 1,000 sq.ft. DO NOT OVERSEED, OR OVER CROWDING OF THE SEEDLINGS MAY OCCUR, AND HAMPER PROPER LAWN GROWTH.
6. LIGHTLY COVER SEEDED AREA WITH ¼"-¾" OF SOIL. (ROLLING OF SEEDBED TO PROMOTE SOIL TO SEED CONTACT IS OPTIONAL.) AND COVER WITH A MULCH OF HAY OR STRAW AT A RATE OF 90 lbs (APPROX 2 BALES) PER 1,000 sq.ft.
7. SEEDED AREA SHALL BE COVERED WITH A MULCH OF STRAW OR HAY AT THE RATE OF 90 lbs. (APPROX. 2 BALES) PER 1,000 S.F. TO HELP MAINTAIN SOIL MOISTURE LEVEL.
8. LIGHTLY WATER SEED BED DAILY TO KEEP IT MOIST, WHILE TAKING CARE NOT TO SATURATE.
9. NEW GRASS SHALL NOT BE MOWED UNTIL IT HAS REACHED A MINIMUM HEIGHT OF 2"-2½".
10. PRACTICE REGULAR MAINTENANCE & WATER REGULARLY AS CONDITIONS REQUIRE.

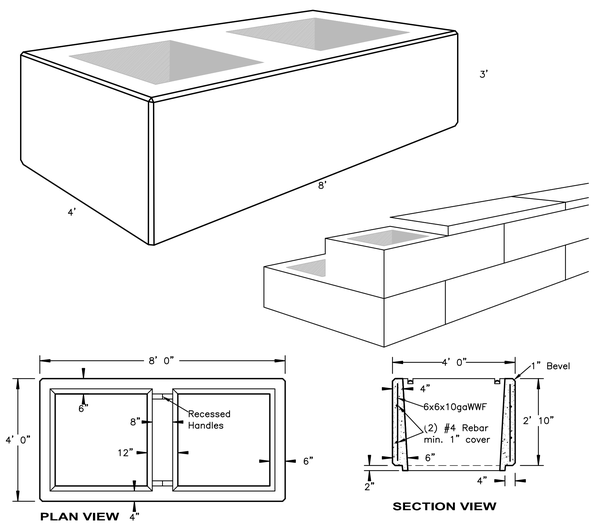

SPECIFICATIONS	PRECAST RETAINING WALLS MODEL RW-4X8
CONCRETE MIN. STRENGTH: 4,000 PSI AT 28 DAYS REINFORCEMENT: #4 REBAR, 6X6X10GA. WWM AIR ENTRAINMENT: 5% WEIGHT: 4,900 LBS LOAD RATING: H20	**Woodard's Concrete Products, Inc.** **629 Lybolt Road, Bullville, NY 10915** **(845) 361-3471 / Fax 361-1050** **www.woodardsconcrete.com**

5 PRECAST RETAINING WALL DETAIL
N.T.S.

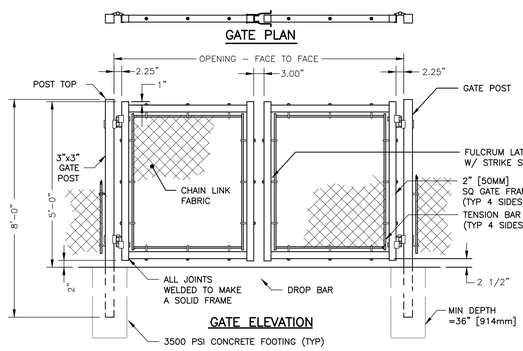

DOUBLE LEAF GATES		
OPENING	GATE POSTS	HINGE SPACE (S)
FACE TO FACE	SQ & RND SIZES	POST TO UPRIGHT
8'-0" THROUGH 12'-0"	2-1/2" SQ OR 2.875" OD	FOR SQUARE & ROUND GATE POSTS: 2-1/4"
14'-0" THROUGH 24'-0"	3" SQ OR 4" OD	FOR SQUARE & ROUND GATE POSTS: 2-1/4"

END & CORNER POST TOP OPTIONS	
STANDARD	FLAT

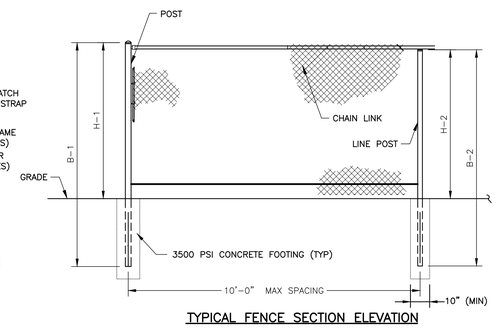

TYPICAL FENCE SECTION ELEVATION

FENCE HEIGHT	END & CORNER POSTS		LINE POSTS	
NOMINAL HEIGHT	B-1 BAR LENGTH	H-1 HEIGHT ABOVE GRADE	B-2 BAR LENGTH	H-2 HEIGHT ABOVE GRADE
5'-0"	8'-0"	5'-0 5/8"	7'-8"	7'-8 7/8"

NOTES:
1. ALL POSTS SHALL BE 2" SCHEDULE 40 STEEL PIPE.
2. FOOTING WIDTH TO BE MINIMUM 10"ø.
3. ALL POSTS, CAPS, HARDWARE AND CHAINLINK FABRIC TO BE BLACK IN COLOR.

6 TYPICAL CHAIN LINK FENCE AND DOUBLE LEAF GATE
N.T.S.

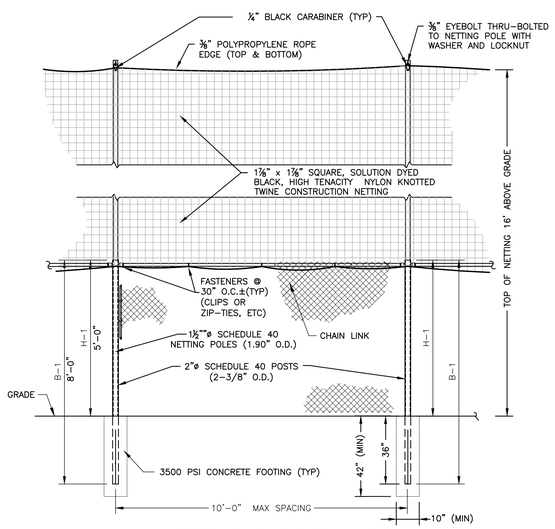

TYPICAL FENCE SECTION ELEVATION

NOTES:
1. ALL FENCE POSTS SHALL BE 2" SCHEDULE 40 STEEL PIPE.
2. FOOTING WIDTH TO BE 10" ø MINIMUM.
3. ALL POSTS, POLES, CAPS, HARDWARE, CHAINLINK FABRIC AND NETTING TO BE BLACK IN COLOR.

7 TYPICAL CHAIN LINK FENCE WITH SPORTS NETTING
N.T.S.

REV #	DATE	REMARKS:	ISSUE #	DATE	ISSUED FOR:
			5	02/12/15	TO PLANNING BOARD
9	05/11/15	TO PLANNING BOARD	4	10/29/14	TO PLANNING BOARD
8	04/01/15	TO PLANNING BOARD	3	10/07/14	TO ZBA
7	03/13/15	TO ORANGE COUNTY PLANNING	2	7/10/14	TO PLANNING BOARD
6	03/09/15	TO NYSDOT, NYSDEC,	1	5/27/14	TO ZBA FOR VARIANCE

⅛" ¼" ½" 0 1" 2"
REFERENCE SCALE

UNAUTHORIZED ALTERATION OR ADDITION TO A PLAN BEARING A LICENSED PROFESSIONAL ENGINEER'S SEAL IS A VIOLATION OF SECTION 7209, SUB-DIVISION 2 OF THE N.Y. STATE EDUCATION LAW.

Dig Safely. New York Call 811 before you dig

TOWN OF CHESTER PLANNING BOARD APPROVAL

FELLENZER ENGINEERING LLP
www.fellp.com
22 Mulberry St., Suite 2A, Middletown, NY 10940 t 845-343-1481 fx 845-343-4986
181 Church St., Suite 100, Poughkeepsie, NY 12601 t 845-454-9704 fx 855-320-8735
MARK D. FELLENZER, P.E.
NY PROFESSIONAL ENGINEER NO. 069846-1

PROJECT TITLE: **PRIMO SPORTS COMPLEX PRELIMINARY SITE PLAN**
STATE ROUTE 94 CHESTER, NY 10918

DRAWING TITLE: DETAILS

DESIGNED BY:	DRAWN BY:	APPROVED BY PM:	APPROVED BY PIC:	DRAWING #:
RDF	SAR	ACL	MDF	C-903
DATE: 5/27/2014	SCALE: AS SHOWN		FE PROJECT #: 14-159	PAGE 16 of 16

File Name: F:\2014\14-159 Chester Sports Complex\DWGs\C-903.dwg (Layout: C-903)
Date: Mon, Nov 16, 2015 - 7:35 AM (Name: sar)