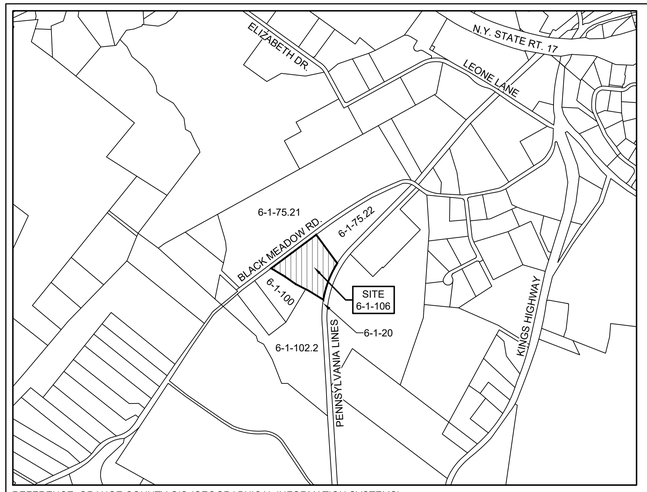

REFERENCE: ORANGE COUNTY GIS (GEOGRAPHICAL INFORMATION SYSTEMS)

VICINITY MAP — 1 / T-1

SCALE: 1" = 1,000'

REFERENCE: GOOGLE EARTH (IMAGERY DATE 9/18/2019)

AERIAL MAP — 2 / T-1

SCALE: NTS

SITE PLAN FOR
TRADE TRANS CORPORATION
173 BLACK MEADOW ROAD
SECTION 6 BLOCK 1 LOT 106
TOWN OF CHESTER
ORANGE COUNTY, N.Y.

DRAWING LIST

T-1	TITLE SHEET
S-1	EXISTING CONDITIONS
S-2	SITE PLAN
S-3	GRADING & UTILITIES PLAN
S-4	STORMWATER MANAGEMENT PLAN
S-5	STORMWATER DETAILS
S-6	LIGHTING PLAN
S-7	LANDSCAPING PLAN
S-8	EROSION & SEDIMENTATION CONTROL PLAN
S-9	EROSION & SEDIMENTATION CONTROL PLAN DETAILS
S-10	SEPTIC DETAILS
S-11	CONSTRUCTION DETAILS

TOWN OF CHESTER
PLANNING BOARD APPROVAL

PROJECT INFORMATION

OWNER OF RECORD	KIPS BAY HOLDINGS OF WARWICK, LLC.
ZONING	IP (INDUSTRIAL PARK DISTRICT)
TAX ID	SECTION 06
	BLOCK 01
	LOT 106
TOTAL LOT AREA	418,612 S.F. / 9.61± ACRES

THIS PLAN CONTAINS 12 SHEETS. THIS SHEET SHALL NOT BE CONSIDERED VALID UNLESS ACCOMPANIED BY THE REMAINING SHEETS.

UNAUTHORIZED ALTERATION OR ADDITIONS TO A PLAN BEARING THE SEAL OF A LICENSED ENGINEER OR LAND SURVEYOR IS A VIOLATION OF SECTION 7209 SUBDIVISION 2 OF THE NEW YORK STATE EDUCATION LAW.

COPIES OF THIS DOCUMENT WITHOUT A FACSIMILE OF THE SIGNATURE AND AN ORIGINAL EMBOSSED SEAL OR ORIGINAL STAMP OF THE PROFESSIONAL ENGINEER OR LAND SURVEYOR SHALL NOT BE CONSIDERED VALID COPIES.

REVISIONS

DWN BY	REV	DESCRIPTION	DATE	APPROVED
DO	0	FOR APPROVAL	08/10/22	
DO	1	REVISED PER TOWN COMMENT	11/23/22	
DO	2	REVISED PER TOWN COMMENT	02/15/23	
DO	3	REVISED LIGHTING PLAN	03/29/23	

JOHN D. FULLER
REG. NO. 077703

JOHN D. FULLER, P.E., P.C.
4 SOUTH STREET
PORT JERVIS, NY 12771
(845) 856-1536

SITE PLAN FOR
TRADE TRANS CORPORATION
173 BLACK MEADOW ROAD
SECTION 6 BLOCK 1 LOT 106
TOWN OF CHESTER, NY

DWG TITLE: TITLE SHEET
DWG NO. T-1
SCALE: AS NOTED
JOB NO. 1713.003

REFERENCE MAP:

MAP ENTITLED, "SITE PLAN, BUILDING EXPANSION PLAN PREPARED FOR TRADE TRANS CORP.", BY ERS ENGINEERING CONSULTATNTS, P.C., DATED 06/26/15, LATEST REVISION DATE 07/07/17, AS JOB NO. 3104.

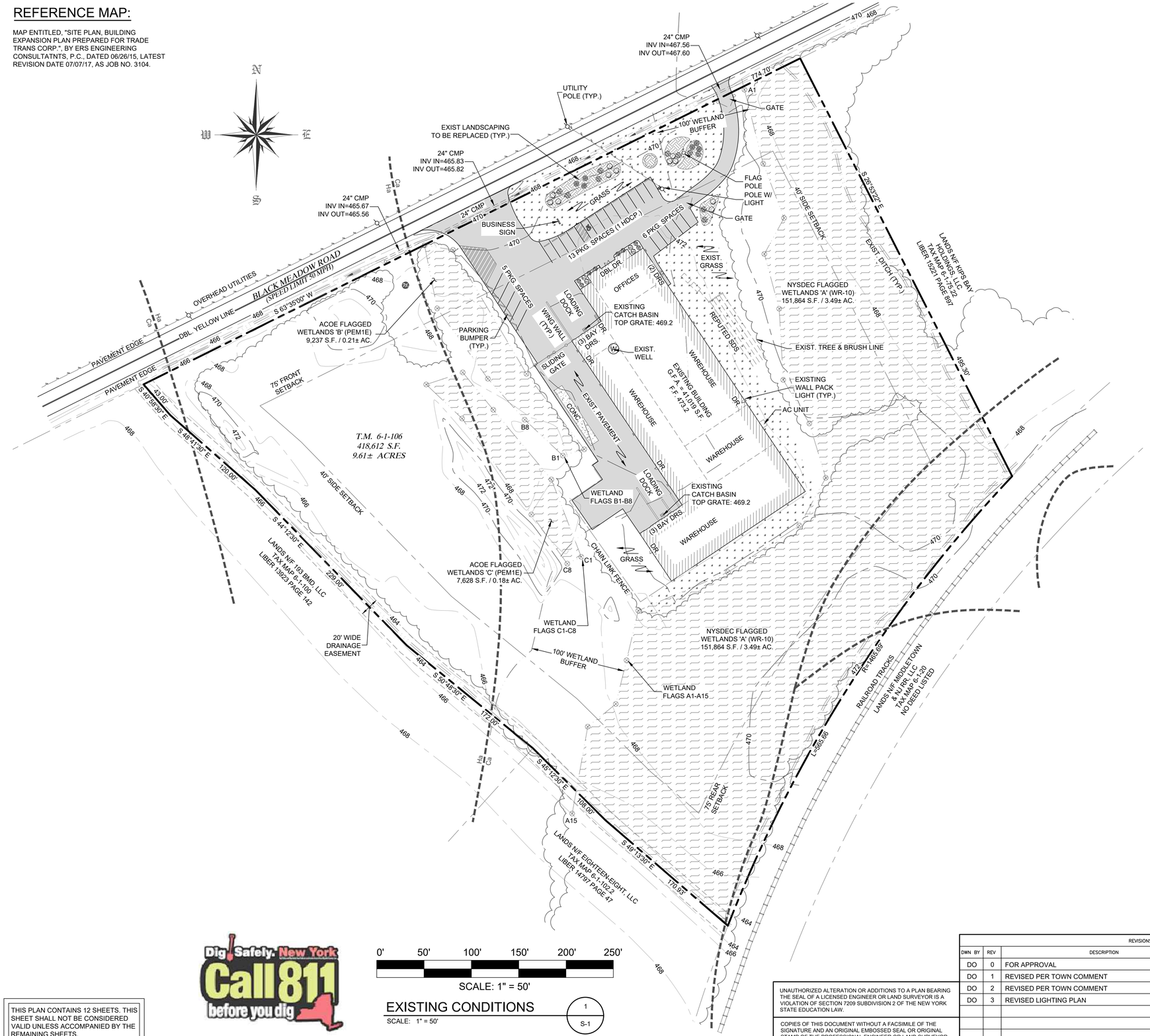

LEGEND

- PROPERTY LINE
- SETBACK LINE
- EXISTING CULVERT
- EXISTING FENCE
- SIGNS
- UTILITY POLE
- OVERHEAD UTILITIES
- SOIL LINES (Ha / Ca)
- EXISTING PARKING
- PARKING BUMPERS
- R.R. TRACKS
- CONTOUR LINES (470 / 472)
- EXISTING BUILDING
- EXISTING TREES / TREE LINE
- EXISTING PAVEMENT
- EXISTING DITCH
- EXISTING LANDSCAPING
- REPUTED SDS
- FLAGGED WETLANDS (A1)
- WETLAND FLAG (A1)
- EXISTING GRASS

GENERAL NOTES

1. OWNER OF RECORD / APPLICANT:
   KIPS BAY HOLDINGS OF WARWICK, LLC
   173 BLACK MEADOW ROAD
   CHESTER, NY 10918
2. TAX MAP DESIGNATION: SECTION 6 BLOCK 1 LOT 106
3. PARCEL ZONED: IP (INDUSTRIAL PARK DISTRICT)
4. TOTAL AREA: 418,612 S.F. / 9.61± ACRES
5. THE ENTIRE SITE IS LOCATED WITHIN FLOOD ZONE AE.
6. EXISTING USE: WAREHOUSE / WHOLESALE

BULK TABLE REQUIREMENTS:

ZONED DISTRICT: IP (INDUSTRIAL PARK DISTRICT)

	MINIMUM REQUIREMENTS	EXISTING
LOT AREA:	2 ACRES	9.61 ACRES
LOT WIDTH:	200 FEET	750.4± FEET
LOT DEPTH:	200 FEET	628.3± FEET
FRONT YARD:	75 FEET	99.2± FEET
REAR YARD:	75 FEET	155.9± FEET
1 SIDE YARD:	70 FEET	202.2± FEET
BOTH SIDES:	140 FEET	431.6± FEET
	MAXIMUM PERMITTED	
BLDG. HEIGHT:	45 FEET	< 45 FEET
LOT COVERAGE:	40 %	18.7 %

TOWN OF CHESTER
PLANNING BOARD APPROVAL

Dig Safely. New York Call 811 before you dig

THIS PLAN CONTAINS 12 SHEETS. THIS SHEET SHALL NOT BE CONSIDERED VALID UNLESS ACCOMPANIED BY THE REMAINING SHEETS.

EXISTING CONDITIONS
SCALE: 1" = 50'
1 / S-1

UNAUTHORIZED ALTERATION OR ADDITIONS TO A PLAN BEARING THE SEAL OF A LICENSED ENGINEER OR LAND SURVEYOR IS A VIOLATION OF SECTION 7209 SUBDIVISION 2 OF THE NEW YORK STATE EDUCATION LAW.

COPIES OF THIS DOCUMENT WITHOUT A FACSIMILE OF THE SIGNATURE AND AN ORIGINAL EMBOSSED SEAL OR ORIGINAL STAMP OF THE PROFESSIONAL ENGINEER OR LAND SURVEYOR SHALL NOT BE CONSIDERED VALID COPIES.

REVISIONS

DWN BY	REV	DESCRIPTION	DATE	APPROVED
DO	0	FOR APPROVAL	08/10/22	
DO	1	REVISED PER TOWN COMMENT	11/23/22	
DO	2	REVISED PER TOWN COMMENT	02/15/23	
DO	3	REVISED LIGHTING PLAN	03/29/23	

JOHN D. FULLER
REG. NO. 077703

JOHN D. FULLER, P.E., P.C.
4 SOUTH STREET
PORT JERVIS, NY 12771
(845) 856-1536

SITE PLAN FOR
TRADE TRANS CORPORATION
173 BLACK MEADOW ROAD
SECTION 6 BLOCK 1 LOT 106
TOWN OF CHESTER, NY

DWG TITLE: EXISTING CONDITIONS
DWG NO. S-1
SCALE: AS NOTED
JOB NO. 1713.003

REFERENCE MAP:

MAP ENTITLED, "SITE PLAN, BUILDING EXPANSION PLAN PREPARED FOR TRADE TRANS CORP.", BY ERS ENGINEERING CONSULTATNTS, P.C., DATED 06/26/15, LATEST REVISION DATE 07/07/17, AS JOB NO. 3104.

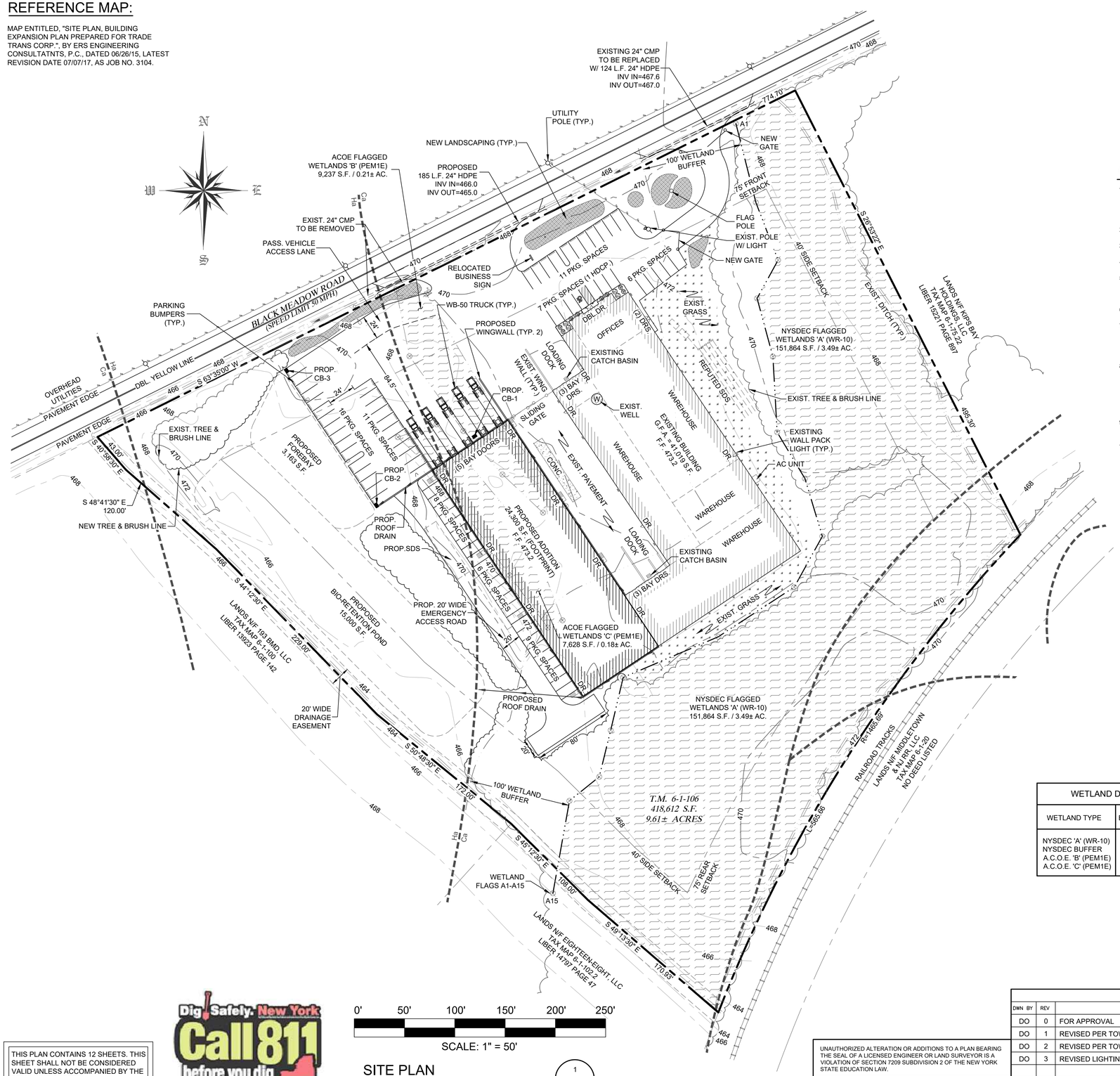

LEGEND

- PROPERTY LINE
- SETBACK LINE
- EXISTING CULVERT
- SIGNS
- UTILITY POLE
- OVERHEAD UTILITIES
- SOIL LINES
- PROPOSED PARKING
- PARKING BUMPERS
- R.R. TRACKS
- CONTOUR LINES
- EXISTING GRASS
- EXISTING BUILDING
- PROPOSED ADDITION
- EXISTING TREES / TREE LINE
- PROPOSED PAVEMENT
- EXISTING DITCH
- LANDSCAPE BEDS
- REPUTED SDS
- FLAGGED WETLANDS
- WETLAND FLAG
- PROPOSED CATCH BASIN

GENERAL NOTES

1. OWNER OF RECORD / APPLICANT:
   KIPS BAY HOLDINGS OF WARWICK, LLC
   173 BLACK MEADOW ROAD
   CHESTER, NY 10918
2. TAX MAP DESIGNATION: SECTION 6 BLOCK 1 LOT 106
3. PARCEL ZONED: IP (INDUSTRIAL PARK DISTRICT)
4. TOTAL AREA: 418,612 S.F. / 9.61± ACRES
5. THE ENTIRE SITE IS LOCATED WITHIN FLOOD ZONE AE. THE PROPOSED BUILDING SHALL MEET FLOODPLAIN DEVELOPMENT STANDARDS.
6. EXISTING USE: WAREHOUSE / WHOLESALE
7. PROPOSED USE: WAREHOUSE / WHOLESALE
   ITEMS STORED IN WAREHOUSE INCLUDE:
   - DRY FOOD PRODUCTS
   - PACKAGING MATERIALS
8. ACCORDING TO THE NEW YORK STATE DEPARTMENT OF ENVIRONMENTAL CONSERVATION DIVISION OF FISH AND WILDLIFE, NEW YORK NATURAL HERITAGE PROGRAM, THE SITE IS A POTENTIAL HABITAT FOR THE BOG TURTLE AND NORTHERN LONG-EARED BAT. TREE CLEARING SHALL BE LIMITED FROM NOVEMBER 1ST THROUGH MARCH 31ST.
9. A PERMIT SHALL BE OBTAINED FROM THE NYSDEC FOR DISTURBANCE TO THE 100' WETLANDS ADJACENT AREA.
10. A PERMIT SHALL BE OBTAINED FROM THE ACOE FOR DISTURBANCE TO FEDERAL WETLANDS.

BULK TABLE REQUIREMENTS:

ZONED DISTRICT: IP (INDUSTRIAL PARK DISTRICT)

	MINIMUM REQUIREMENTS	PROPOSED
LOT AREA:	2 ACRES	9.61 ACRES
LOT WIDTH:	200 FEET	750.4± FEET
LOT DEPTH:	200 FEET	628.3± FEET
FRONT YARD:	75 FEET	99.2± FEET
REAR YARD:	75 FEET	155.9± FEET
1 SIDE YARD:	70 FEET	143.4± FEET
BOTH SIDES:	140 FEET	345.6± FEET
	MAXIMUM PERMITTED	
BLDG. HEIGHT:	45 FEET	< 45 FEET
LOT COVERAGE:	40 %	25.9 %

PARKING CALCULATIONS:

WAREHOUSE OR WHOLESALE : 1 SPACE PER 500 S.F. OF GROSS FLOOR AREA

EXISTING BLDG = 41,019 S.F.
41,019 S.F. / 500 = 82 SPACES REQUIRED*
24 SPACES PROVIDED*

PROPOSED ADDITION = 24,300 S.F.
24,300 S.F. / 500 = 48.6 = 49 SPACES REQUIRED

TOTAL SPACES REQUIRED = 24 + 49 = 73
TOTAL SPACES PROVIDED = 74 (INCLUDES 1 HANDICAP)

* PARKING VARIANCE GRANTED FOR 24 SPACES ON OCTOBER 20, 2015. (SEE MAP REFERENCE)

WETLAND DISTURBANCE CHART		
WETLAND TYPE	EXISTING AREA	PROPOSED DISTURBANCE
NYSDEC 'A' (WR-10)	151,864 S.F.	0 S.F.
NYSDEC BUFFER	82,566 S.F.	14,243 S.F.
A.C.O.E. 'B' (PEM1E)	9,237 S.F.	9,237 S.F.
A.C.O.E. 'C' (PEM1E)	7,628 S.F.	7,628 S.F.

TOWN OF CHESTER
PLANNING BOARD APPROVAL

THIS PLAN CONTAINS 12 SHEETS. THIS SHEET SHALL NOT BE CONSIDERED VALID UNLESS ACCOMPANIED BY THE REMAINING SHEETS.

Dig Safely. New York Call 811 before you dig

SITE PLAN
SCALE: 1" = 50'
1 / S-2

UNAUTHORIZED ALTERATION OR ADDITIONS TO A PLAN BEARING THE SEAL OF A LICENSED ENGINEER OR LAND SURVEYOR IS A VIOLATION OF SECTION 7209 SUBDIVISION 2 OF THE NEW YORK STATE EDUCATION LAW.

COPIES OF THIS DOCUMENT WITHOUT A FACSIMILE OF THE SIGNATURE AND AN ORIGINAL EMBOSSED SEAL OR ORIGINAL STAMP OF THE PROFESSIONAL ENGINEER OR LAND SURVEYOR SHALL NOT BE CONSIDERED VALID COPIES.

REVISIONS

DWN BY	REV	DESCRIPTION	DATE	APPROVED
DO	0	FOR APPROVAL	08/10/22	
DO	1	REVISED PER TOWN COMMENT	11/23/22	
DO	2	REVISED PER TOWN COMMENT	02/15/23	
DO	3	REVISED LIGHTING PLAN	03/29/23	

JOHN D. FULLER
REG. NO. 077703

JOHN D. FULLER, P.E., P.C.
4 SOUTH STREET
PORT JERVIS, NY 12771
(845) 856-1536

SITE PLAN FOR
TRADE TRANS CORPORATION
173 BLACK MEADOW ROAD
SECTION 6 BLOCK 1 LOT 106
TOWN OF CHESTER, NY

DWG TITLE: SITE PLAN
DWG NO.: S-2
SCALE: AS NOTED
JOB NO.: 1713.003

DEEP PIT TEST RESULTS

T1 - 2/11/2023		T2 - 2/11/2023		T3* - 2/14/2023	
0 - 14"	BLACK TOPSOIL SILT LOAM	0 - 14"	BLACK TOPSOIL SILT LOAM	0 - 12"	BLACK TOPSOIL SILT LOAM
14" - 30"	BROWN / GRAY SILTY CLAY LOAM	14" - 28"	BROWN / GRAY SILTY CLAY LOAM	12" - 27"	BROWN / GRAY SILTY CLAY LOAM
30" - 72"	BROWN / GRAY SAND	28" - 72"	BROWN / GRAY SAND	27" - 72"	BROWN / GRAY SAND
NO WATER NO LEDGE TRACE MOTTLING		NO WATER NO LEDGE TRACE MOTTLING		NO WATER NO LEDGE TRACE MOTTLING	

PERCOLATION TEST RESULTS

DATE	TEST NO.	DEPTH OF HOLE (IN.)	STABILIZED RATE (MIN.)	DESIGN RATE (MIN.)
02/11/23	P1	24	23 min 30 sec	45 - 60
02/11/23	P2	24	39 min 0 sec	
02/14/23	P3*	24	41 min 30 sec	

* SOIL TESTING WITNESSED BY A REPRESENTATIVE FROM THE TOWN OF CHESTER.

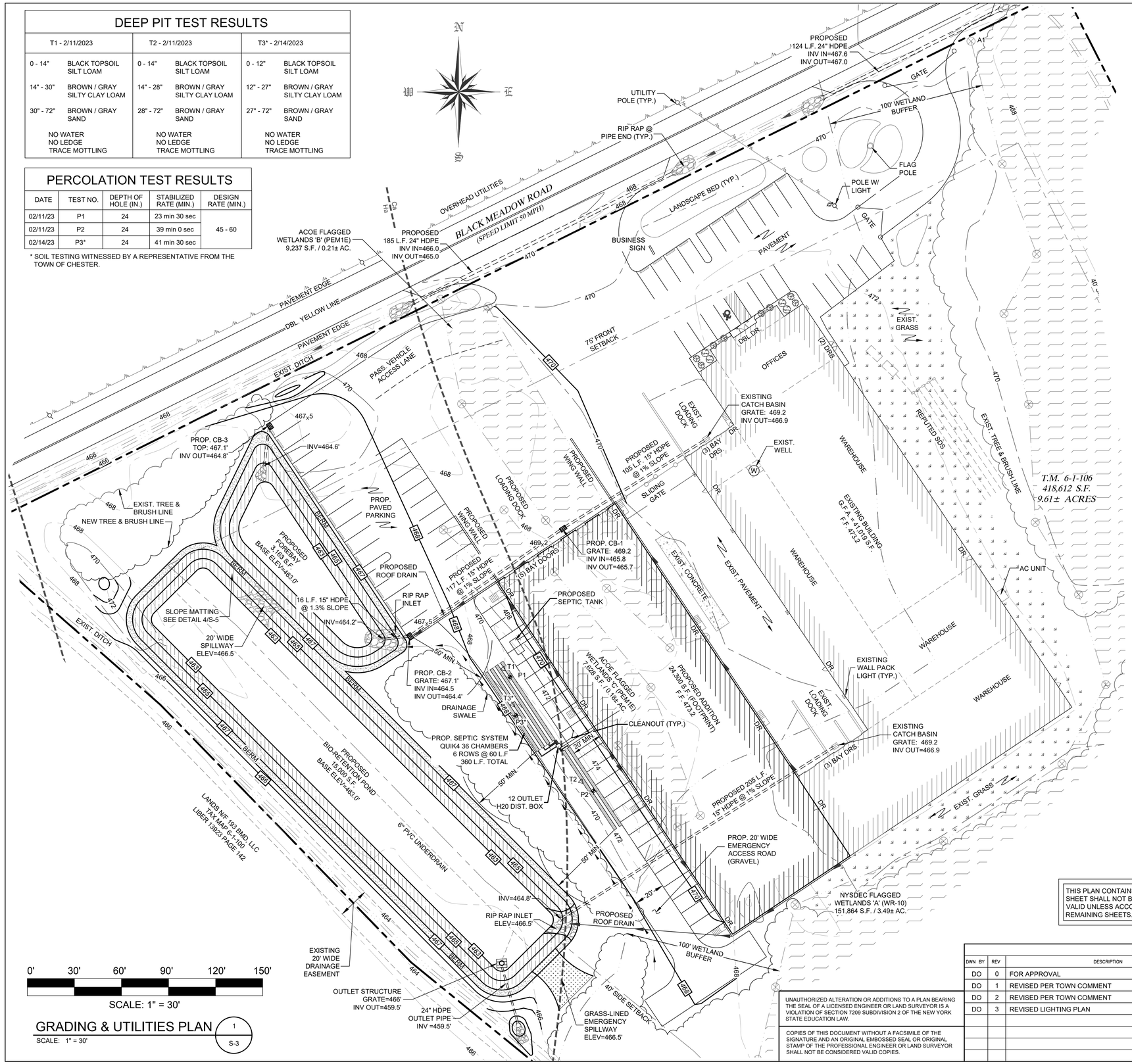

GRADING & UTILITIES PLAN (1 / S-3)

SCALE: 1" = 30'

LEGEND

- PROPERTY LINE
- SETBACK LINE
- EXISTING CULVERT
- SIGNS
- UTILITY POLE
- OVERHEAD UTILITIES
- SOIL LINES (Ha / Ca)
- PROPOSED PARKING
- CONTOUR LINES (470 / 472)
- EXISTING GRASS
- PROPOSED CATCH BASIN (CB-1)
- EXISTING BUILDING
- PROPOSED ADDITION
- EXISTING TREES / TREE LINE
- EXISTING PAVEMENT
- EXISTING DITCH
- LANDSCAPE BEDS
- REPUTED SDS
- FLAGGED WETLANDS (A1)
- WETLAND FLAG (A1)
- PROPOSED GRADING (470)
- SOIL TESTS

GRADING & UTILITIES NOTES

1. CONTRACTOR IS RESPONSIBLE FOR VERIFICATION OF EXISTING TOPOGRAPHY INFORMATION AND UTILITY INVERT ELEVATIONS PRIOR TO COMMENCEMENT OF ANY CONSTRUCTION. CONTRACTOR TO ENSURE 1.5% MIN. ACROSS ALL PAVED SURFACES AND SLOPE ALONG ALL GUTTERS TO PREVENT PONDING. THE CONTRACTOR IS RESPONSIBLE FOR IDENTIFYING ALL DISCREPANCIES AND OTHER CONDITIONS THAT MAY EFFECT PUBLIC SAFETY AS WELL AS THE PROJECT COST TO ENGINEER IMMEDIATELY IN WRITING.
2. LOCATION OF ALL EXISTING AND PROPOSED SERVICES ARE APPROXIMATE AND MUST BE CONFIRMED INDEPENDENTLY WITH LOCAL UTILITY COMPANIES PRIOR TO COMMENCEMENT OF ANY CONSTRUCTION OR EXCAVATION. SANITARY SEWER AND ALL OTHER UTILITY SERVICES CONNECTION POINTS SHALL BE CONFIRMED INDEPENDENTLY BY THE CONTRACTOR IN FIELD PRIOR TO THE COMMENCEMENT OF CONSTRUCTION. ALL DISCREPANCIES SHALL COMMENCE BEGINNING AT THE LOWEST INVERT (POINT OF CONNECTION) AND PROGRESS UP GRADIENT. INTERFACE POINTS (CROSSING) WITH EXISTING UNDERGROUND INSTALLATIONS SHALL BE FIELD VERIFIED BY TEST PIT PRIOR TO COMMENCEMENT OF CONSTRUCTION. A MINIMUM OF 15" VERTICAL CLEARANCE SHALL BE MAINTAINED BETWEEN ALL UTILITY CROSSING. ANY POTENTIAL CROSSINGS LESS THAN THE MINIMUM REQUIRED SHALL BE REPORTED TO THE ENGINEER IMMEDIATELY IN WRITING.
3. REFER TO CONSTRUCTION DETAIL PLAN FOR GRADING AND YARD DETAILS.
4. IN CASE OF DISCREPANCIES BETWEEN PLANS, THE SITE PLAN WILL SUPERSEDE IN ALL CASES. NOTIFY ENGINEER OF RECORD OF ANY CONFLICTS.
5. IT SHALL BE THE CONTRACTOR'S RESPONSIBILITY TO NOTIFY "THE NEW YORK ONE CALL SYSTEM" (1-800-962-7962) 48 HOURS PRIOR TO ANY EXCAVATION ON THIS SITE. CONTRACTOR SHALL ALSO NOTIFY LOCAL WATER & SEWER DEPARTMENTS TO MARK OUT THEIR UTILITIES
6. WORK WITHIN THE RIGHT-OF-WAY SHALL BE CONDUCTED IN ACCORDANCE WITH THE TOWN OF WAWAYANDA REQUIREMENTS.
7. ALL UTILITY CONNECTIONS TO BE MADE IN ACCORDANCE WITH UTILITY COMPANY REQUIREMENTS.
8. ALL UTILITY SERVICES TO BE SIZED IN ACCORDANCE WITH ARCHITECTURAL PLANS (BY OTHERS).

THIS PLAN CONTAINS 12 SHEETS. THIS SHEET SHALL NOT BE CONSIDERED VALID UNLESS ACCOMPANIED BY THE REMAINING SHEETS.

Dig Safely. New York Call 811 before you dig

TOWN OF CHESTER PLANNING BOARD APPROVAL

UNAUTHORIZED ALTERATION OR ADDITIONS TO A PLAN BEARING THE SEAL OF A LICENSED ENGINEER OR LAND SURVEYOR IS A VIOLATION OF SECTION 7209 SUBDIVISION 2 OF THE NEW YORK STATE EDUCATION LAW.

COPIES OF THIS DOCUMENT WITHOUT A FACSIMILE OF THE SIGNATURE AND AN ORIGINAL EMBOSSED SEAL OR ORIGINAL STAMP OF THE PROFESSIONAL ENGINEER OR LAND SURVEYOR SHALL NOT BE CONSIDERED VALID COPIES.

REVISIONS

DWN BY	REV	DESCRIPTION	DATE	APPROVED
DO	0	FOR APPROVAL	08/10/22	
DO	1	REVISED PER TOWN COMMENT	11/23/22	
DO	2	REVISED PER TOWN COMMENT	02/15/23	
DO	3	REVISED LIGHTING PLAN	03/29/23	

JOHN D. FULLER
REG. NO. 077703

JOHN D. FULLER, P.E., P.C.
4 SOUTH STREET
PORT JERVIS, NY 12771
(845) 856-1536

SITE PLAN FOR
TRADE TRANS CORPORATION
173 BLACK MEADOW ROAD
SECTION 6 BLOCK 1 LOT 106
TOWN OF CHESTER, NY

DWG TITLE: GRADING & UTILITIES PLAN
DWG NO. S-3
SCALE: AS NOTED
JOB NO. 1713.003

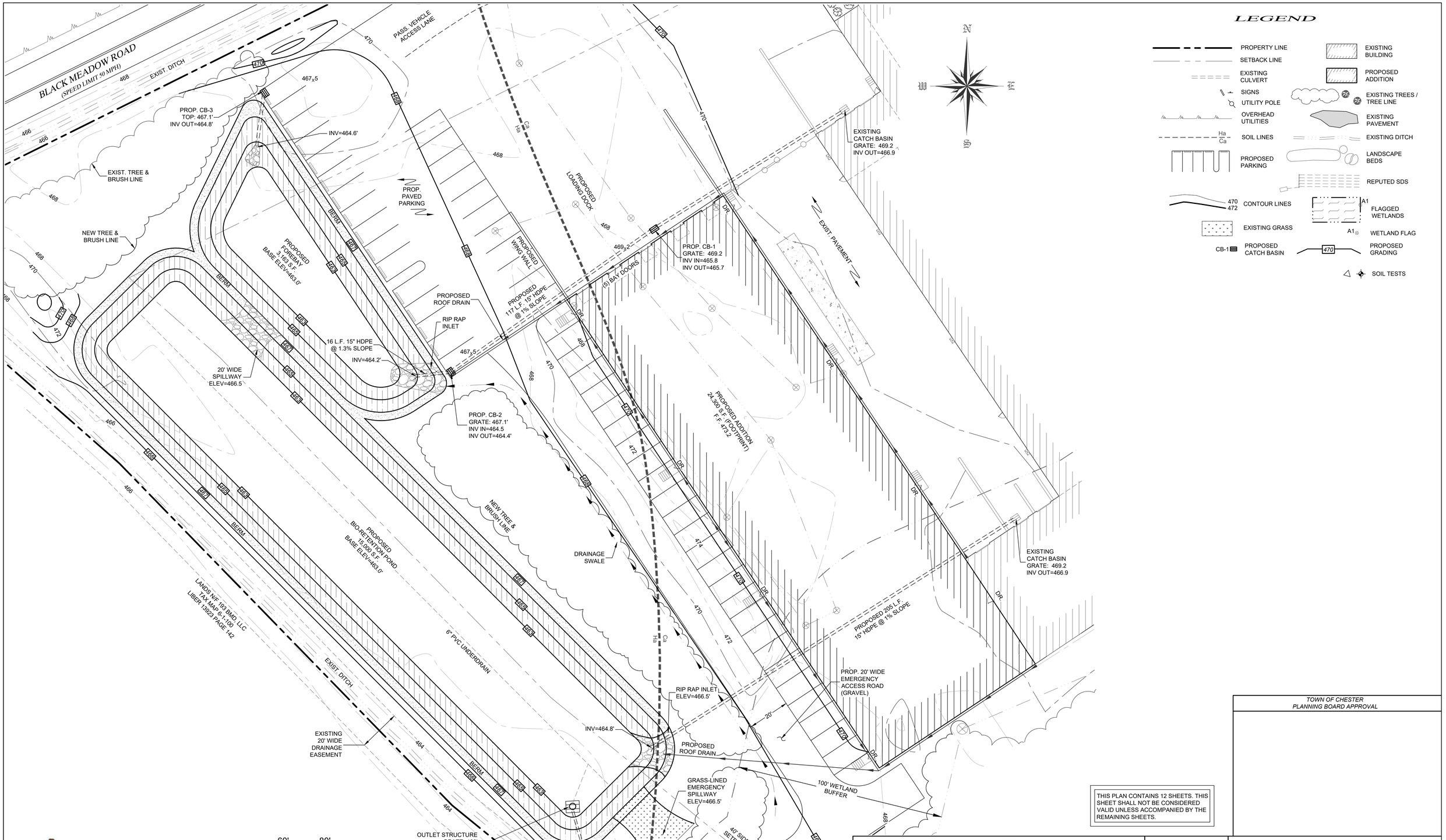

STORMWATER MANAGEMENT PLAN (1 / S-4)

SCALE: 1" = 20'

Dig Safely. New York Call 811 before you dig

THIS PLAN CONTAINS 12 SHEETS. THIS SHEET SHALL NOT BE CONSIDERED VALID UNLESS ACCOMPANIED BY THE REMAINING SHEETS.

TOWN OF CHESTER
PLANNING BOARD APPROVAL

UNAUTHORIZED ALTERATION OR ADDITIONS TO A PLAN BEARING THE SEAL OF A LICENSED ENGINEER OR LAND SURVEYOR IS A VIOLATION OF SECTION 7209 SUBDIVISION 2 OF THE NEW YORK STATE EDUCATION LAW.

COPIES OF THIS DOCUMENT WITHOUT A FACSIMILE OF THE SIGNATURE AND AN ORIGINAL EMBOSSED SEAL OR ORIGINAL STAMP OF THE PROFESSIONAL ENGINEER OR LAND SURVEYOR SHALL NOT BE CONSIDERED VALID COPIES.

REVISIONS

DWN BY	REV	DESCRIPTION	DATE	APPROVED
DO	0	FOR APPROVAL	08/10/22	
DO	1	REVISED PER TOWN COMMENT	11/23/22	
DO	2	REVISED PER TOWN COMMENT	02/15/23	
DO	3	REVISED LIGHTING PLAN	03/29/23	

JOHN D. FULLER
REG. NO. 077703

JOHN D. FULLER, P.E., P.C.
4 SOUTH STREET
PORT JERVIS, NY 12771
(845) 856-1536

SITE PLAN FOR
TRADE TRANS CORPORATION
173 BLACK MEADOW ROAD
SECTION 6 BLOCK 1 LOT 106
TOWN OF CHESTER, NY

DWG TITLE: STORMWATER MANAGEMENT PLAN
DWG NO. S-4
SCALE: AS NOTED
JOB NO. 1713.003

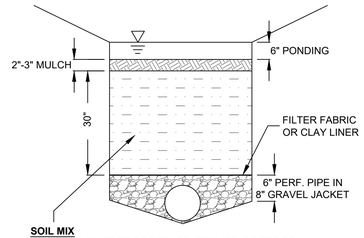

SOIL MIX
UNIFORM MIX, FREE OF STONES, STUMPS, ROOTS OR OTHER OBJECTS LARGER THAN 2"Ø AND FREE OF NOXIOUS WEEDS. WELL BLENDED MIXTURE OF 3 PARTS SAND AND 1 PART TOPSOIL, BY VOLUME.
PH RANGE: 5.76 TO 7.6
ORGANIC CONTENT: 3-7%
SAND: CONCRETE SAND

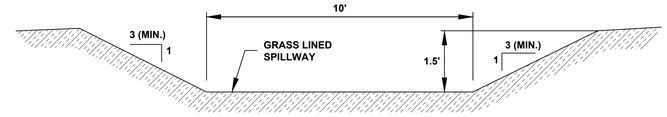

SECTION A - A

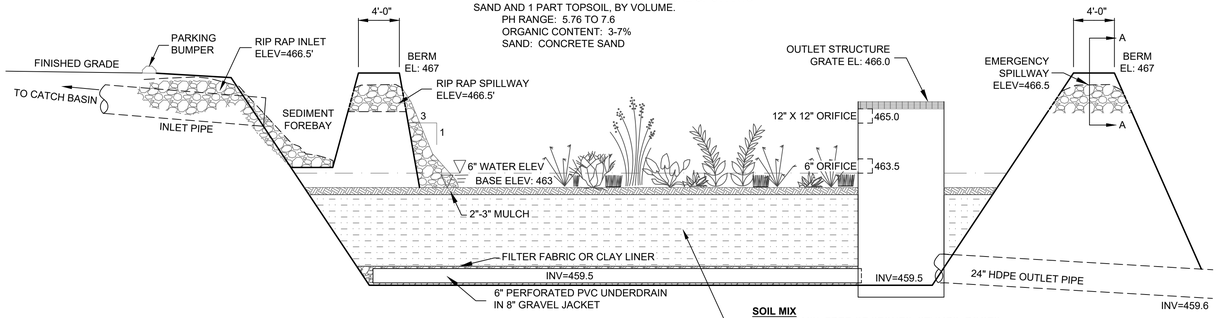

CROSS SECTION

SOIL MIX
UNIFORM MIX, FREE OF STONES, STUMPS, ROOTS OR OTHER OBJECTS LARGER THAN 2"Ø AND FREE OF NOXIOUS WEEDS. WELL BLENDED MIXTURE OF 3 PARTS SAND AND 1 PART TOPSOIL, BY VOLUME.
PH RANGE: 5.76 TO 7.6
ORGANIC CONTENT: 3-7%
SAND: CONCRETE SAND

BIORETENTION POND DETAIL

SCALE: NONE

1 / S-5

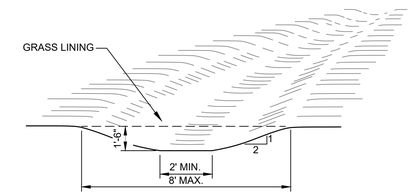

CHANNEL CROSS-SECTION

CONSTRUCTION SPECIFICATIONS:

1. ALL TREES, BRUSH, STUMPS, OBSTRUCTIONS AND OTHER OBJECTIONABLE SHALL BE REMOVED AND DISPOSED OF SO AS NOT TO INTERFERE WITH THE PROPER FUNCTIONING OF THE WATERWAY.
2. THE WATERWAY SHALL BE EXCAVATED OR SHAPED TO LINE, GRADE AND CROSS SECTION AS REQUIRED TO MEET THE CRITERIA SPECIFIED HEREIN, AND BE FREE OF BANK PROJECTIONS
3. ALL EARTH REMOVED AND NOT NEEDED IN CONSTRUCTION SHALL BE SPREAD OR DISPOSED OF SO THAT IT WILL NOT INTERFERE WITH THE FUNCTIONING OF THE WATERWAY. OR OTHER IRREGULARITIES WHICH WILL IMPEDE NORMAL FLOW.
4. FILL SHALL BE COMPACTED AS NEEDED IN CONSTRUCTION TO PREVENT UNEQUAL SETTLEMENT THAT WOULD CAUSE DAMAGE IN THE COMPLETED WATERWAY.

VEGETATED SWALE DETAIL

SCALE: N. T. S.

4 / S-5

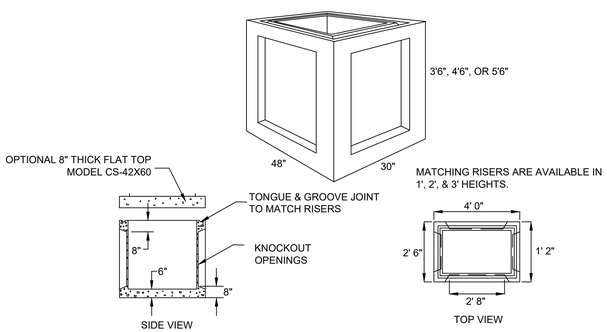

SPECIFICATIONS	PRECAST CATCH BASIN MODEL CB-30X48
Concrete Min. Strength: 4,000 psi at 28 days Reinforcement: #4 Rebar / ASTM A615 Air Entrainment: 5% Construction Joint: Butyl Rubber Sealant Weights: 3' Base = 3,400 lbs, 4' Base = 3,900 5' Base = 4,400 lbs, Risers = 1,100 lbs/vf Load Rating: H20 / ASTM C857	Woodard's Concrete Products, Inc. 629 Lybolt Road, Bullville, NY 10915 (845) 361-3471 / Fax 361-1050

*PROVIDE WOODARDS PRODUCT OR EQUAL

PRECAST CATCH BASIN DETAIL

SCALE: N. T. S.

2 / S-5

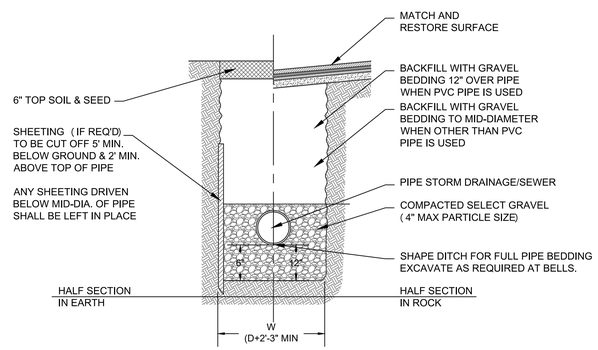

SCALE: N. T. S.

TYPICAL TRENCH DETAIL

3 / S-5

THIS PLAN CONTAINS 12 SHEETS. THIS SHEET SHALL NOT BE CONSIDERED VALID UNLESS ACCOMPANIED BY THE REMAINING SHEETS.

Dig Safely. New York
Call 811
before you dig

TOWN OF CHESTER
PLANNING BOARD APPROVAL

UNAUTHORIZED ALTERATION OR ADDITIONS TO A PLAN BEARING THE SEAL OF A LICENSED ENGINEER OR LAND SURVEYOR IS A VIOLATION OF SECTION 7209 SUBDIVISION 2 OF THE NEW YORK STATE EDUCATION LAW.

COPIES OF THIS DOCUMENT WITHOUT A FACSIMILE OF THE SIGNATURE AND AN ORIGINAL EMBOSSED SEAL OR ORIGINAL STAMP OF THE PROFESSIONAL ENGINEER OR LAND SURVEYOR SHALL NOT BE CONSIDERED VALID COPIES.

REVISIONS

DWN BY	REV	DESCRIPTION	DATE	APPROVED
DO	0	FOR APPROVAL	08/10/22	
DO	1	REVISED PER TOWN COMMENT	11/23/22	
DO	2	REVISED PER TOWN COMMENT	02/15/23	
DO	3	REVISED LIGHTING PLAN	03/29/23	

JOHN D. FULLER
REG. NO. 077703

JOHN D. FULLER, P.E., P.C.
4 SOUTH STREET
PORT JERVIS, NY 12771
(845) 856-1536

SITE PLAN FOR
TRADE TRANS CORPORATION
173 BLACK MEADOW ROAD
SECTION 6 BLOCK 1 LOT 106
TOWN OF CHESTER, NY

DWG TITLE: STORMWATER DETAILS
DWG NO. S-5
SCALE: AS NOTED
JOB NO. 1713.003

LEGEND

- PROPERTY LINE
- SETBACK LINE
- EXISTING CULVERT
- SIGNS
- UTILITY POLE
- OVERHEAD UTILITIES
- PROPOSED PARKING
- EXISTING GRASS
- EXISTING BUILDING
- PROPOSED ADDITION
- EXISTING TREES / TREE LINE
- EXISTING DITCH
- LANDSCAPE BEDS
- CATCH BASIN

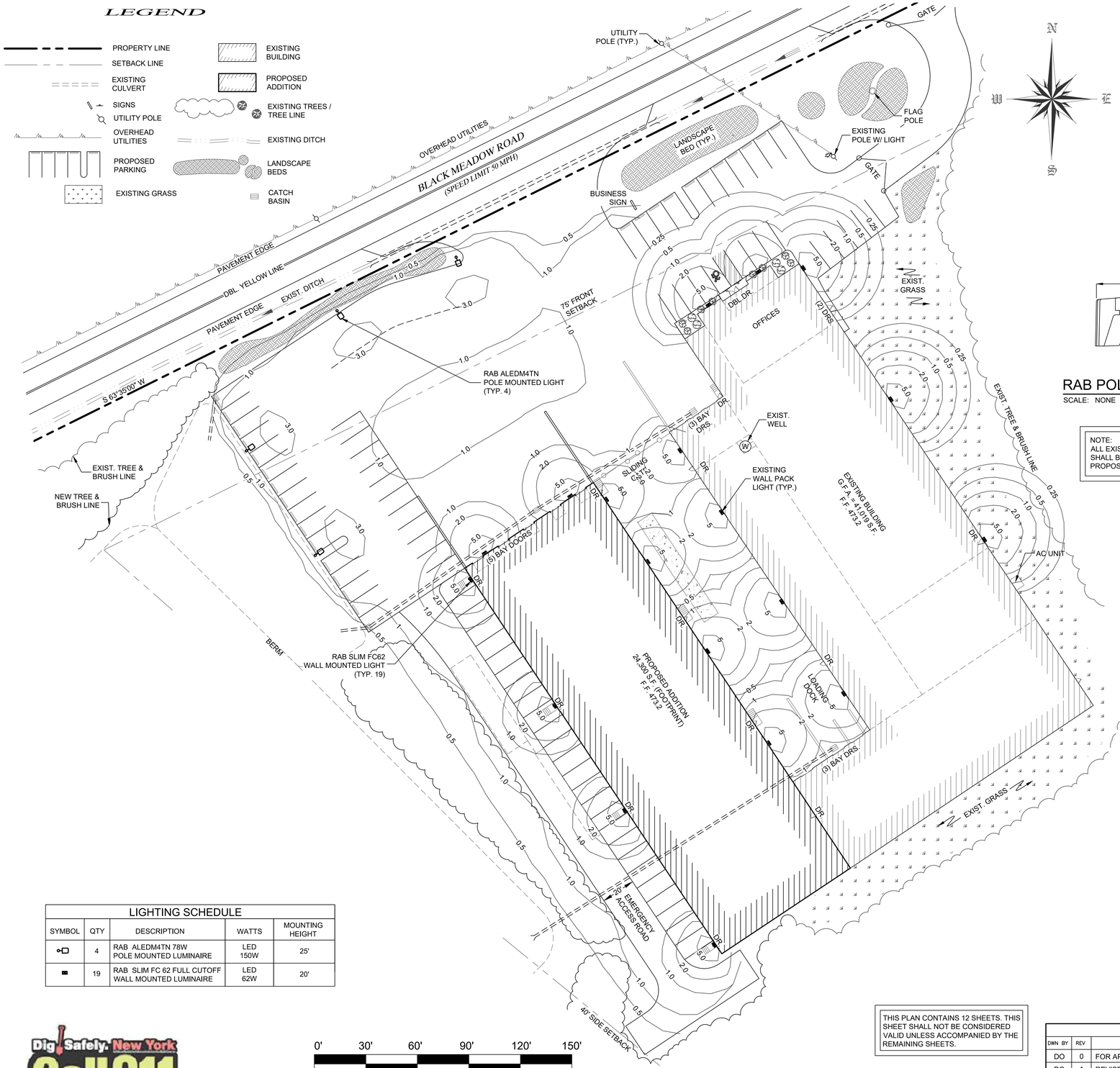

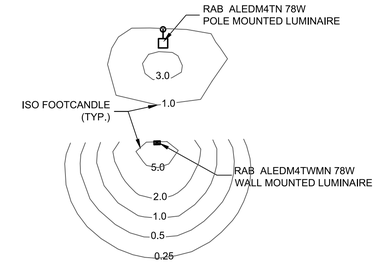

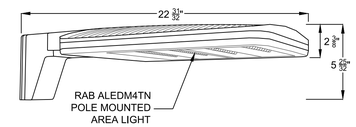

RAB POLE MOUNTED LUMINAIRE DETAIL (2 / S-6)

SCALE: NONE

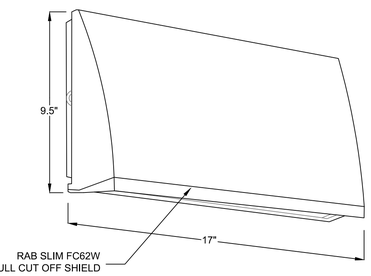

RAB WALL MOUNTED LUMINARE DETAIL (3 / S-6)

SCALE: NONE

NOTE:
ALL EXISTING WALL PACKS SHALL BE REFITTED WITH PROPOSED RAB SLIM FC62

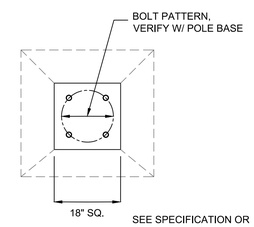

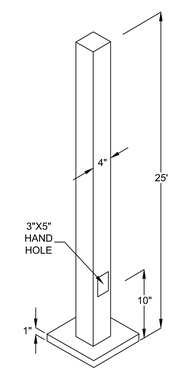

SPECIFICATIONS

MODEL:	RAB PS4-07-25D2
SHAFT:	46,000 P.S.I. MIN. YIELD
BASE PLATES:	36,000 P.D.I. MIN. YIELD
GAUGE:	7
WALL THICKNESS:	3/16"
SHAFT SIZE:	4"
BASE DIMENSION:	8"

SQUARE STEEL POLE DETAIL (5 / S-6)

SCALE: NONE

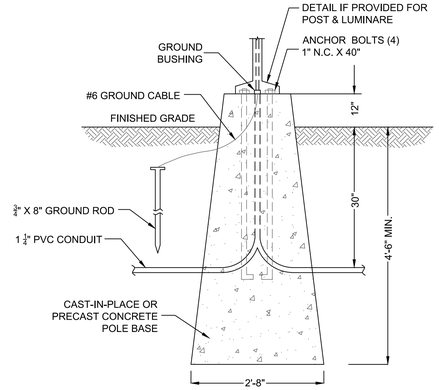

LIGHT POLE BASE DETAIL (4 / S-6)

SCALE: NONE

LIGHTING SCHEDULE				
SYMBOL	QTY	DESCRIPTION	WATTS	MOUNTING HEIGHT
	4	RAB ALEDM4TN 78W POLE MOUNTED LUMINAIRE	LED 150W	25'
	19	RAB SLIM FC 62 FULL CUTOFF WALL MOUNTED LUMINAIRE	LED 62W	20'

0' 30' 60' 90' 120' 150'

SCALE: 1" = 30'

LIGHTING PLAN (1 / S-6)

SCALE: 1" = 30'

Dig Safely. New York Call 811 before you dig

THIS PLAN CONTAINS 12 SHEETS. THIS SHEET SHALL NOT BE CONSIDERED VALID UNLESS ACCOMPANIED BY THE REMAINING SHEETS.

UNAUTHORIZED ALTERATION OR ADDITIONS TO A PLAN BEARING THE SEAL OF A LICENSED ENGINEER OR LAND SURVEYOR IS A VIOLATION OF SECTION 7209 SUBDIVISION 2 OF THE NEW YORK STATE EDUCATION LAW.

COPIES OF THIS DOCUMENT WITHOUT A FACSIMILE OF THE SIGNATURE AND AN ORIGINAL EMBOSSED SEAL OR ORIGINAL STAMP OF THE PROFESSIONAL ENGINEER OR LAND SURVEYOR SHALL NOT BE CONSIDERED VALID COPIES.

REVISIONS

DWN BY	REV	DESCRIPTION	DATE	APPROVED
DO	0	FOR APPROVAL	08/10/22	
DO	1	REVISED PER TOWN COMMENT	11/23/22	
DO	2	REVISED PER TOWN COMMENT	02/15/23	
DO	3	REVISED LIGHTING PLAN	03/29/23	

JOHN D. FULLER
REG. NO. 077703

TOWN OF CHESTER
PLANNING BOARD APPROVAL

JOHN D. FULLER, P.E., P.C.
4 SOUTH STREET
PORT JERVIS, NY 12771
(845) 856-1536

SITE PLAN FOR
TRADE TRANS CORPORATION
173 BLACK MEADOW ROAD
SECTION 6 BLOCK 1 LOT 106
TOWN OF CHESTER, NY

DWG TITLE: LIGHTING PLAN
DWG NO. S-6
SCALE: AS NOTED
JOB NO. 1713.003

PLANTING NOTES

1. FINAL LOCATION OF ALL PLANTS TO BE DETERMINED IN THE FIELD BY THE OWNER.
2. ALL PLANTS AND ENTIRE SHRUB BEDS TO RECEIVE 3" MIN. DECORATIVE LANDSCAPE STONE OR MULCH. NON-COMBUSTIBLE MULCH SHALL BE USED WHEN PLANTINGS ARE LOCATED ADJACENT TO BUILDINGS.
3. TOPSOIL AND SEED ALL DISTURBED AREAS AS A RESULT OF ANY AND ALL CONSTRUCTION OR STORAGE OF EQUIPMENT. CONTRACTOR TO FIELD VERIFY ALL AREAS OF SEED.
4. TOPSOIL SHALL BE SANDY LOAM, FREE FROM SUBSOIL, STONES LARGER THAN 3/4" OR ANY UNDESIRABLE MATERIAL. 4% ORGANIC MATTER - PH 5.0 TO 6.5.

NAME OF GRASS	PROPORTION BY WT.	MIN. GERM.	MIN. PURITY
PENNLAWN FESCUE	60%	85%	95%
FYIKING BLUEGRASS	30%	85%	90%
PERENNIAL RYEGRASS	10%	95%	95%

5. THE CONTRACTOR SHALL BE RESPONSIBLE FOR THE LAWN THROUGH THE SECOND CUTTING. WATER ALL LAWNS AND PLANTINGS UNTIL FINAL ACCEPTANCE BY THE OWNER.
6. ALL PLANTS SHALL CONFORM TO GUIDELINES AS SET FORTH IN THE LATEST EDITION OF THE AMERICAN ASSOCIATION OF NURSERYMEN'S STANDARD FOR NURSERY STOCK AND SHALL BE INSPECTED UPON DELIVERY TO SITE PRIOR TO PLANTING.
7. NO SUBSTITUTIONS OF PLANT MATERIALS SHALL BE MADE WITHOUT WRITTEN CONSENT FROM THE LANDSCAPE ARCHITECT FOR THE TOWN.
8. LANDSCAPE MATERIALS SHALL BE INSTALLED BY LOCAL COMPANIES FAMILIAR WITH CONDITIONS IN THE AREA THAT EMPLOY NYS CERTIFIED NURSERY PROFESSIONALS.

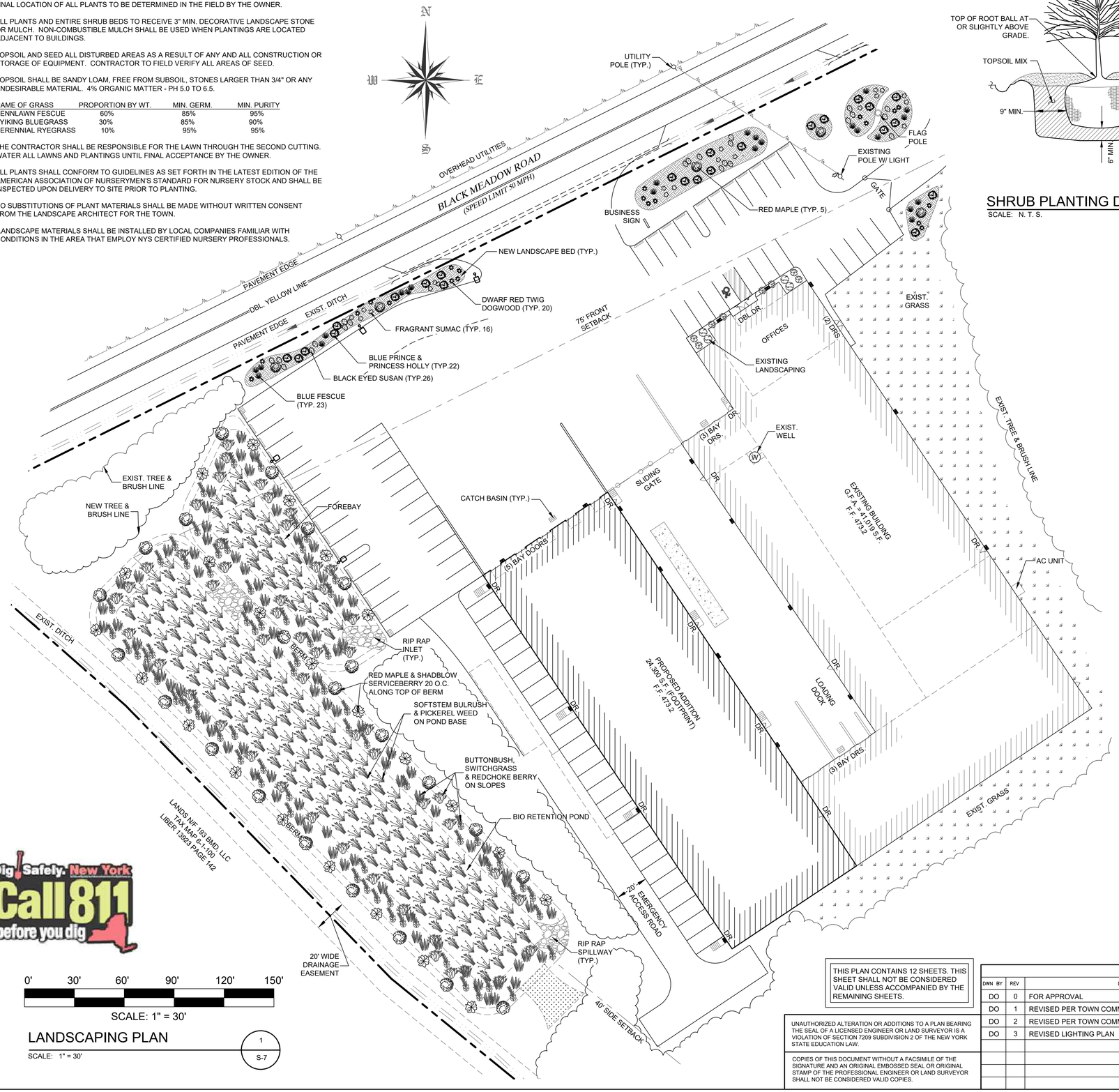

0' 30' 60' 90' 120' 150'

SCALE: 1" = 30'

LANDSCAPING PLAN

SCALE: 1" = 30'

1 / S-7

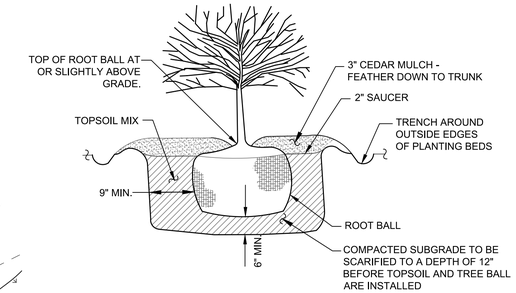

SHRUB PLANTING DETAIL

SCALE: N. T. S.

2 / S-7

LEGEND

- PROPERTY LINE
- SETBACK LINE
- EXISTING CULVERT
- SIGNS
- UTILITY POLE
- OVERHEAD UTILITIES
- PROPOSED PARKING
- EXISTING GRASS
- EXISTING BUILDING
- PROPOSED ADDITION
- EXISTING TREES / TREE LINE
- EXISTING DITCH
- NEW LANDSCAPING
- CATCH BASIN

PLANTING LIST

SYM.	QTY.	SIZE	SPACING	HARDINESS ZONE	BOTANICAL NAME	COMMON NAME
	22	3 GAL.	3'-4'	5-8	ILEX X MESERVEAE BLUE PRINCE & PRINCESS	BLUE PRINCE & PRINCESS HOLLY
	26	1 GAL.	24"	3-9	RUDBECKIA FULGIDA GOLDSTURM	BLACK EYED SUSAN
	16	2 GAL.	3'	3-9	RHUS AROMATICA 'GRO-LOW'	FRAGRANT SUMAC
	23	1 GAL.	1'-1.5'	4-11	FESTURA GLAUCA 'ELIJAH BLUE'	BLUE FESCUE
	20	3 GAL.	24" - 36"	3-8	CORNUS SERICEA 'KELSEYI'	RED TWIG DOGWOOD
	24	3" CAL.	12' - 15'	4-9	ACER RUBRUM OCTOBER GLORY	RED MAPLE OCTOBER GLORY

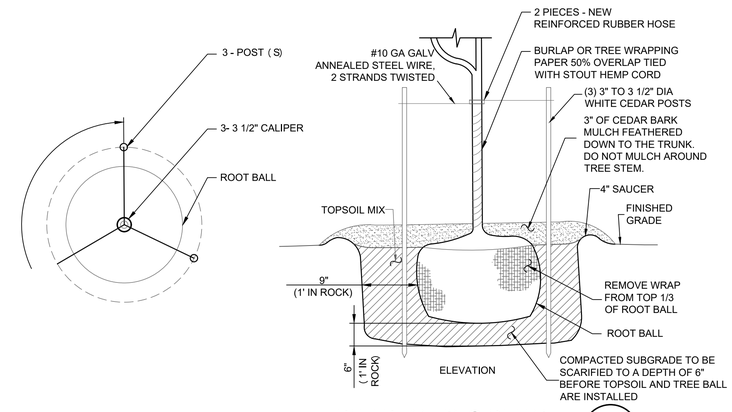

TREE PLANTING DETAIL

SCALE: NONE

3 / S-7

NOTE: CEDAR STAKES AND WIRES SHOULD BE REMOVED AFTER ONE YEAR.

BIORETENTION POND PLANTING LIST

SYM	COMMON NAME	BOTANICAL NAME	AMT.
	RED MAPLE	ACER RUBRUM 'OCTOBER GLORY'	23
	SHADBLOW SERVICEBERRY	AMELANCHIER CANADENSIS	23
	RED CHOKEBERRY	ARONIA ARBUTIFOLIA	50
	SWITCHGRASS	PANICUM VIRGATUM	88
	BUTTONBUSH	CEPHALANTHUS OCCIDENTALIS	70
	SOFTSTEM BULRUSH	SCHOENOPLECTUS TABERNAEMONTANI	113
	PICKERAL WEED	PONTEDERIA CORDATA	111

TREES TO BE SPACED 20' O.C. ALONG TOP OF BERM
TOTAL OF 432 PLANTS AND 42 TREES

TOWN OF CHESTER
PLANNING BOARD APPROVAL

THIS PLAN CONTAINS 12 SHEETS. THIS SHEET SHALL NOT BE CONSIDERED VALID UNLESS ACCOMPANIED BY THE REMAINING SHEETS.

UNAUTHORIZED ALTERATION OR ADDITIONS TO A PLAN BEARING THE SEAL OF A LICENSED ENGINEER OR LAND SURVEYOR IS A VIOLATION OF SECTION 7209 SUBDIVISION 2 OF THE NEW YORK STATE EDUCATION LAW.

COPIES OF THIS DOCUMENT WITHOUT A FACSIMILE OF THE SIGNATURE AND AN ORIGINAL EMBOSSED SEAL OR ORIGINAL STAMP OF THE PROFESSIONAL ENGINEER OR LAND SURVEYOR SHALL NOT BE CONSIDERED VALID COPIES.

REVISIONS

DWN BY	REV	DESCRIPTION	DATE	APPROVED
DO	0	FOR APPROVAL	08/10/22	
DO	1	REVISED PER TOWN COMMENT	11/23/22	
DO	2	REVISED PER TOWN COMMENT	02/15/23	
DO	3	REVISED LIGHTING PLAN	03/29/23	

JOHN D. FULLER
REG. NO. 077703

JOHN D. FULLER, P.E., P.C.
4 SOUTH STREET
PORT JERVIS, NY 12771
(845) 856-1536

SITE PLAN FOR
TRADE TRANS CORPORATION
173 BLACK MEADOW ROAD
SECTION 6 BLOCK 1 LOT 106
TOWN OF CHESTER, NY

DWG TITLE: LANDSCAPING PLAN
DWG NO. S-7
SCALE: AS NOTED
JOB NO. 1713.003

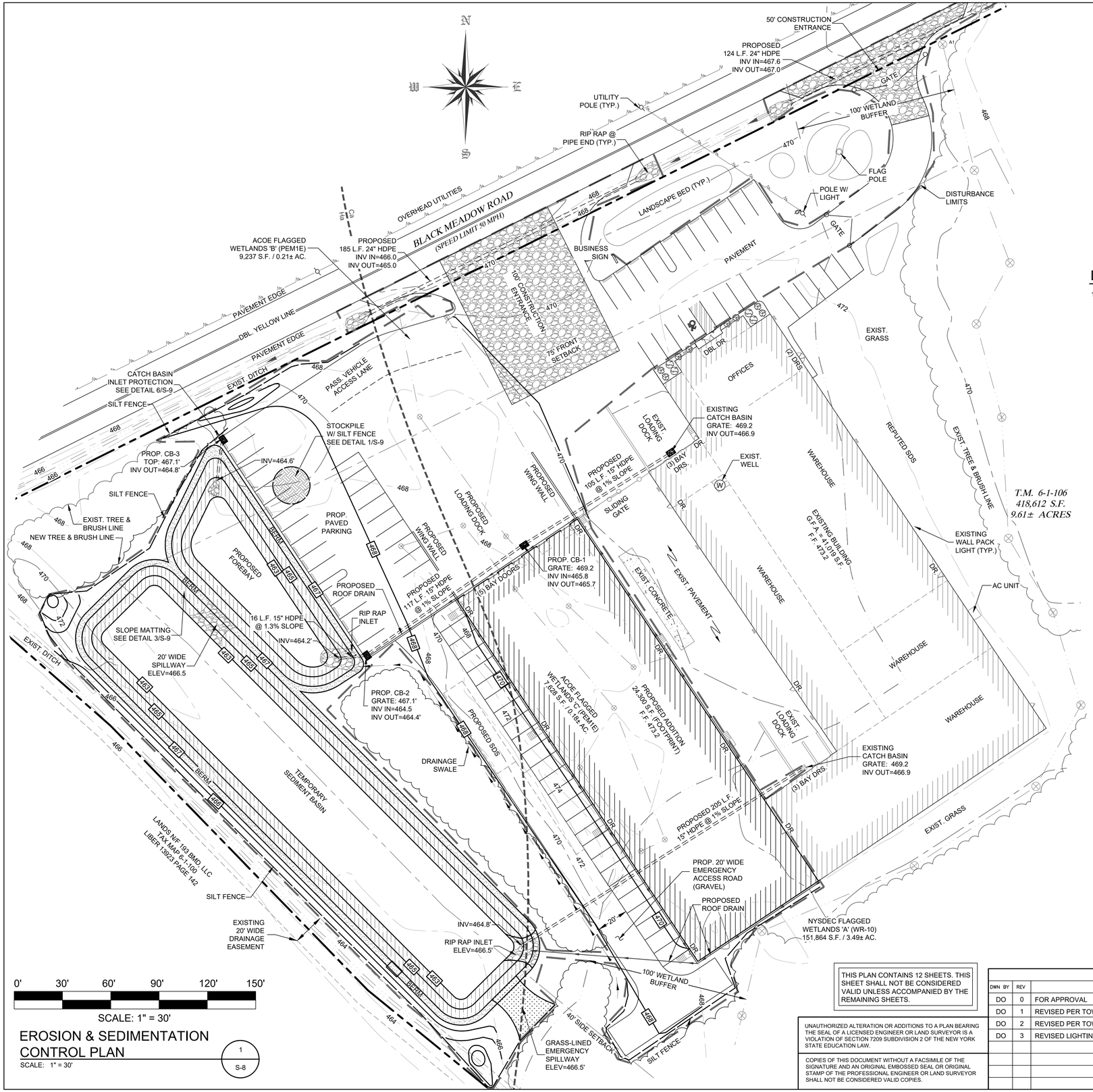

0' 30' 60' 90' 120' 150'

SCALE: 1" = 30'

EROSION & SEDIMENTATION CONTROL PLAN

SCALE: 1" = 30'

1
S-8

LEGEND

- PROPERTY LINE
- SETBACK LINE
- EXISTING CULVERT
- SIGNS
- UTILITY POLE
- OVERHEAD UTILITIES
- SOIL LINES (Ha / Ca)
- PROPOSED PARKING
- CONTOUR LINES (470 / 472)
- EXISTING GRASS
- SILT FENCE
- LIMITS OF DISTURBANCE
- EXISTING BUILDING
- PROPOSED ADDITION
- EXISTING TREES / TREE LINE
- PAVEMENT
- EXISTING DITCH
- LANDSCAPE BEDS
- REPUTED SDS
- FLAGGED WETLANDS (A1)
- WETLAND FLAG (A1)
- PROPOSED GRADING (470)
- STOCKPILE W/ SILT FENCE
- PROPOSED CATCH BASIN

DISTURBANCE AREA

159,238 S.F. / 3.66± ACRES

EROSION & SEDIMENTATION CONTROL NOTES

1. ALL SEDIMENT AND EROSION CONTROL MEASURES SHALL BE DONE IN ACCORDANCE WITH ANY AND ALL FEDERAL, STATE, AND LOCAL REGULATIONS.
2. THOSE AREAS UNDERGOING ACTUAL CONSTRUCTION WILL BE LEFT IN AN UNTREATED OR UNVEGETATED CONDITION FOR A MINIMUM TIME. AREAS SHALL BE PERMANENTLY STABILIZED WITHIN 15 DAYS OF FINAL GRADING AND TEMPORARY STABILIZED WITHIN 30 DAYS OF INITIAL DISTURBANCE OF THE SOIL IF THE DISTURBANCE IS WITHIN 100 FEET OF A STREAM OR POND. THE AREA SHALL BE STABILIZED WITHIN 7 DAYS OR PRIOR TO ANY STORM EVENT (THIS WOULD INCLUDE WETLANDS).
3. SEDIMENT BARRIERS (SILT FENCE, HAY BARRIERS, ETC.) SHOULD BE INSTALLED PRIOR TO ANY SOIL DISTURBANCE OF THE CONTRIBUTING DRAINAGE AREA ABOVE THEM. MULCH NETTING SHALL BE USED TO ANCHOR MULCH IN ALL AREAS WITH SLOPES GREATER THAN 15% AFTER OCTOBER 1ST THE SAME APPLIES FOR ALL SLOPES GREATER THAN 8%.
4. INSTALL SILT FENCE AT TOE OF SLOPE TO FILTER SILT FROM RUNOFF. SEE SILT FENCE DETAIL FOR PROPER INSTALLATION. SILT FENCE WILL REMAIN IN PLACE PER NOTE #5.
5. ALL EROSION CONTROL STRUCTURES WILL BE INSPECTED, REPLACED AND/OR REPAIRED EVERY 7 DAYS AND IMMEDIATELY FOLLOWING ANY SIGNIFICANT RAINFALL OR SNOW MELT OR WHEN NO LONGER SERVICEABLE DUE TO SEDIMENT ACCUMULATION OR DECOMPOSURE. SEDIMENT DEPOSITS SHOULD BE REMOVED AFTER EACH STORM EVENT. THEY MUST BE REMOVED WHEN DEPOSITS REACH APPROXIMATELY ONE HALF THE HEIGHT OF THE BARRIER. SEDIMENT CONTROL DEVICES SHALL REMAIN IN PLACE AND BE MAINTAINED BY THE CONTRACTOR UNTIL AREAS UPSLOPE ARE STABILIZED BY TURF.
6. NO SLOPES, EITHER PERMANENT OR TEMPORARY, SHALL BE STEEPER THAN TWO TO ONE (2 TO 1).
7. IF FINAL SEEDING OF THE DISTURBED AREAS IS NOT COMPLETED 45 DAYS PRIOR TO THE FIRST KILLING FROST USE TEMPORARY MULCH (DORMANT SEEDING MAY BE ATTEMPTED AS WELL) TO PROTECT THE SITE AND DELAY SEEDING UNTIL THE NEXT RECOMMENDED SEEDING PERIOD.
8. THE TEMPORARY SEEDING OF DISTURBED AREAS THAT HAVE NOT BEEN FINAL GRADED SHALL BE COMPLETED 45 DAYS PRIOR TO THE FIRST KILLING FROST TO PROTECT FROM SPRING RUNOFF PROBLEMS.
9. DURING THE CONSTRUCTION PHASE, INTERCEPTED SEDIMENT WILL BE RETURNED TO SITE AND REGRADED ONTO OPEN AREAS.
10. ALL TEMPORARY EROSION CONTROL MEASURES SHALL BE REMOVED ONCE THE SITE IS STABILIZED.

TOWN OF CHESTER
PLANNING BOARD APPROVAL

Dig Safely. New York Call 811 before you dig

THIS PLAN CONTAINS 12 SHEETS. THIS SHEET SHALL NOT BE CONSIDERED VALID UNLESS ACCOMPANIED BY THE REMAINING SHEETS.

UNAUTHORIZED ALTERATION OR ADDITIONS TO A PLAN BEARING THE SEAL OF A LICENSED ENGINEER OR LAND SURVEYOR IS A VIOLATION OF SECTION 7209 SUBDIVISION 2 OF THE NEW YORK STATE EDUCATION LAW.

COPIES OF THIS DOCUMENT WITHOUT A FACSIMILE OF THE SIGNATURE AND AN ORIGINAL EMBOSSED SEAL OR ORIGINAL STAMP OF THE PROFESSIONAL ENGINEER OR LAND SURVEYOR SHALL NOT BE CONSIDERED VALID COPIES.

REVISIONS

DWN BY	REV	DESCRIPTION	DATE	APPROVED
DO	0	FOR APPROVAL	08/10/22	
DO	1	REVISED PER TOWN COMMENT	11/23/22	
DO	2	REVISED PER TOWN COMMENT	02/15/23	
DO	3	REVISED LIGHTING PLAN	03/29/23	

JOHN D. FULLER
REG. NO. 077703

JOHN D. FULLER, P.E., P.C.
4 SOUTH STREET
PORT JERVIS, NY 12771
(845) 856-1536

SITE PLAN FOR
TRADE TRANS CORPORATION
173 BLACK MEADOW ROAD
SECTION 6 BLOCK 1 LOT 106
TOWN OF CHESTER, NY

DWG TITLE: EROSION & SEDIMENTATION CONTROL PLAN
DWG NO. S-8
SCALE: AS NOTED
JOB NO. 1713.003

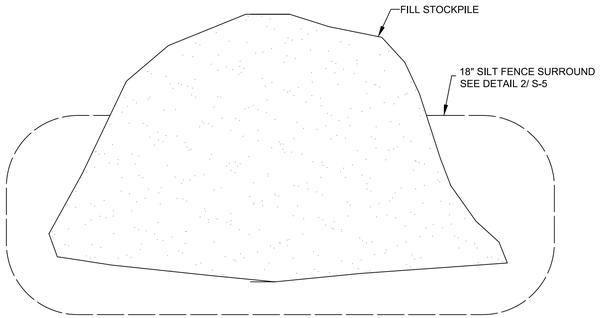

NOTE:
STOCKPILE HEIGHTS MUST NOT EXCEED 35 FEET.
STOCKPILE SLOPES MUST BE 2:1 OR FLATTER.

STOCKPILE DETAIL

SCALE: NONE

1 / S-9

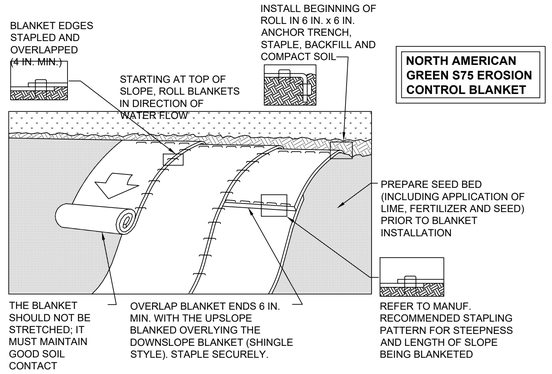

SLOPE MATTING INSTALLATION DETAIL

SCALE: NONE

3 / S-9

NOTES:

SEED AND SOIL AMENDMENTS SHALL BE APPLIED ACCORDING TO THE RATES IN THE PLAN DRAWINGS PRIOR TO INSTALLING THE BLANKET.

PROVIDE ANCHOR TRENCH AT TOE OF SLOPE IN SIMILAR FASHION AS AT TOP OF SLOPE.

SLOPE SURFACE SHALL BE FREE OF ROCKS, CLODS, STICKS, AND GRASS.

BLANKET SHALL HAVE GOOD CONTINUOUS CONTACT WITH UNDERLYING SOIL THROUGHOUT ENTIRE LENGTH. LAY BLANKET LOOSELY AND STAKE OR STAPLE TO MAINTAIN DIRECT CONTACT WITH SOIL. DO NOT STRETCH BLANKET.

THE BLANKET SHALL BE STAPLED IN ACCORDANCE WITH THE MANUFACTURER'S RECOMMENDATIONS.

BLANKETED AREAS SHALL BE INSPECTED WEEKLY AND AFTER EACH STORMWATER EVENT UNTIL PERENNIAL VEGETATION IS ESTABLISHED TO A MINIMUM UNIFORM 70% COVERAGE THROUGHOUT THE BLANKETED AREA. DAMAGED OR DISPLACED BLANKETS SHALL BE RESTORED OR REPLACED WITHIN 4 CALENDAR DAYS.

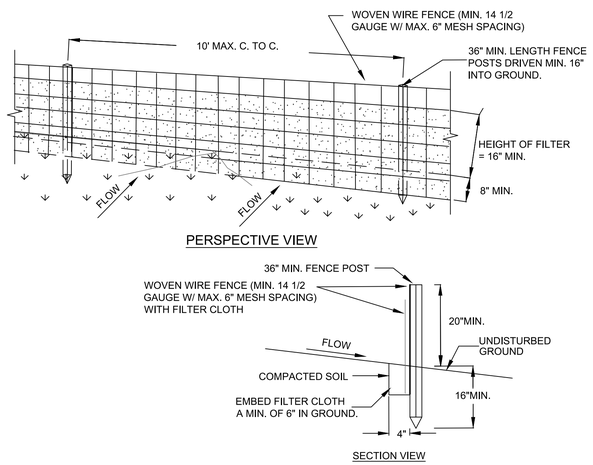

CONSTRUCTION SPECIFICATIONS

1. WOVEN WIRE FENCE TO BE FASTENED SECURELY TO FENCE POSTS WITH WIRE TIES OR STAPLES. POSTS SHALL BE STEEL EITHER "T" OR "U" TYPE OR HARDWOOD.
2. FILTER CLOTH TO BE TO BE FASTENED SECURELY TO WOVEN WIRE FENCE WITH TIES SPACED EVERY 24" AT TOP AND MID SECTION. FENCE SHALL BE WOVEN WIRE, 12 1/2 GAUGE, 6" MAXIMUM MESH OPENING.
3. WHEN TWO SECTIONS OF FILTER CLOTH ADJOIN EACH OTHER THEY SHALL BE OVER-LAPPED BY SIX INCHES AND FOLDED. FILTER CLOTH SHALL BE EITHER FILTER X, MIRAFI 100X, STABILINKA T140N, OR APPROVED EQUIVALENT.
4. PREFABRICATED UNITS SHALL BE GEOFAB, ENVIROFENCE, OR APPROVED EQUIVALENT.
5. MAINTENANCE SHALL BE PERFORMED AS NEEDED AND MATERIAL REMOVED WHEN "BULGES" DEVELOP IN THE SILT FENCE.

SILT FENCE DETAIL

SCALE: NTS

2 / S-9

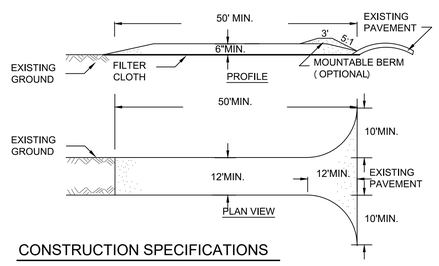

CONSTRUCTION SPECIFICATIONS

1. STONE SIZE = USE 2" STONE, OR RECLAIMED OR RECYCLED CONCRETE EQUIVALENT.
2. LENGTH = NOT LESS THAN FIFTY (50) FEET (EXCEPT ON A SINGLE RESIDENCE LOT WHERE A 30 FOOT MINIMUM LENGTH WOULD APPLY).
3. THICKNESS = NOT LESS THAN SIX (6) INCHES.
4. WIDTH = TWELVE (12) FOOT MINIMUM, BUT NOT LESS THAN THE FULL WIDTH AT POINTS WHERE INGRESS OR EGRESS OCCUR. TWENTY-FOUR (24) FEET IF SINGLE ENTRANCE TO SITE.
5. FILTER CLOTH - WILL BE PLACED OVER THE ENTIRE AREA PRIOR TO PLACING OF STONE.
6. SURFACE WATER - ALL SURFACE WATER FLOWING OR DIVERTED TOWARD CONSTRUCTION ENTRANCES SHALL BE PIPED ACROSS THE ENTRANCE. IF PIPING IS IMPRACTICAL, A MOUNTABLE BERM WITH 5:1 SLOPES WILL BE PERMITTED.
7. MAINTENANCE - THE ENTRANCE SHALL BE MAINTAINED IN A CONDITION WHICH WILL PREVENT TRACKING OR FLOWING OF SEDIMENT ONTO PUBLIC RIGHTS-OF-WAY. ALL SEDIMENT SPILLED, DROPPED, WASHED OR TRACKED ONTO PUBLIC RIGHTS-OF-WAY MUST BE REMOVED IMMEDIATELY.
8. WHEN WASHING IS REQUIRED, IT SHALL BE DONE ON AN AREA STABILIZED WITH STONE AND WHICH DRAINS INTO AN APPROVED SEDIMENT TRAPPING DEVICE.
9. PERIODIC INSPECTION AND NEEDED MAINTENANCE SHALL BE PROVIDED AFTER EACH RAIN.

CONSTRUCTION ENTRANCE

SCALE: N. T. S.

4 / S-9

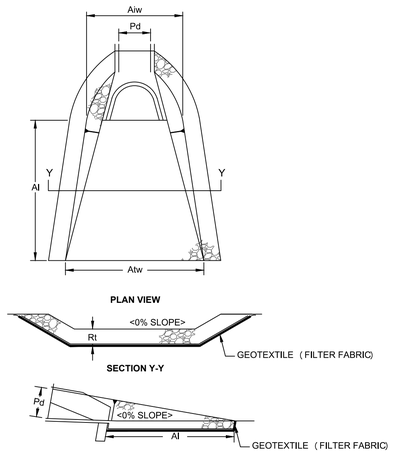

OUTLET NO.	PIPE DIA Pd (IN)	RIPRAP SIZE (R-_)	RIPRAP THICK. Rt (IN)	APRON LENGTH Al (FT)	APRON INITIAL WIDTH Aiw (FT)	APRON TERMINAL WIDTH Atw (FT)
1	15	4	6	12	3	10
-	-	-	-	-	-	-
-	-	-	-	-	-	-

RIP RAP APRON AT PIPE OUTLET

SCALE: N. T. S.

5 / S-9

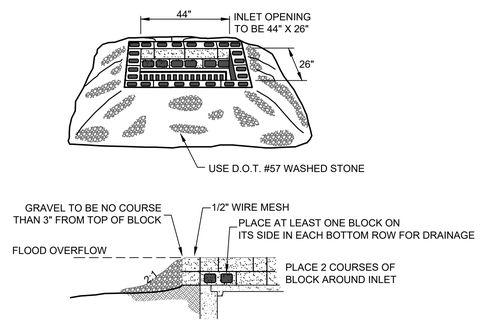

CONSTRUCTION SPECIFICATIONS

1. LAY CONCRETE BLOCKS ON FIRM, SMOOTH FOUNDATION EXCAUATED 3" BELOW STORM DRAIN TOP, PLACE BLOCKS AGAINST DRAIN INLET FOR LATERAL SUPPORT.
2. PLACE AT LEAST ONE CONCRETE BLOCK ON ITS SIDE IN EACH BOTTOM ROW OF BLOCKS.
3. PLACE WIRE MESH WITH 1/2" OPENINGS OVER ALL BLOCK OPENINGS USED FOR DRAINAGE.
4. USE D O.T. #57 WASHED STONE TO REDUCE FLOW RATE BUT ALLOW DRAINAGE, PLACE STONE ON 2:1 SLOPE TO WITHIN 3" OF TOP OF BLOCK
5. ANY SOIL LEFT EXPOSED BETWEEN THE BLOCK AND CONCRETE DRAIN INLET SHOULD BE FILLED WITH 3" DIAMETER STONE TO PREVENT WASHING WHEN WATER FLOWS OVER BLOCKS INTO DRAIN.

CATCH BASIN INLET PROTECTION DETAIL

SCALE: NONE

6 / S-9

CONSTRUCTION SEQUENCE

STAGE 1 (SITE PREPARATION)

1. SCHEDULE ON-SITE PRE-CONSTRUCTION MEETING WITH ENGINEER,CONTRACTOR, LANDOWNER, AND TOWNSHIP AT LEAST ONE WEEK PRIOR TO THE START OF CONSTRUCTION.
2. INSTALL CONSTRUCTION ENTRANCE AND PERIMETER SILT FENCE.
3. CONSTRUCT SEDIMENT INFILTRATION BASINS AS SHOWN ON THE PLAN. EROSION CONTROLS MUST BE CONSTRUCTED, STABILIZED, AND FUNCTIONAL BEFORE NEW SITE DISTURBANCE BEGINS.
4. CLEAR AND GRUB SITE. STRIP TOPSOIL AND STOCKPILE AS SHOWN ON THE EROSION AND SEDIMENTATION CONTROL PLAN AND STABILIZE IN ACCORDANCE WITH THE SEEDING AND MULCHING SPECIFICATIONS.
5. INITIATE EARTH MOVING ACTIVITIES FOR SITE DEVELOPMENT. UNSUITABLE MATERIAL IS TO BE REMOVED FROM THE PROJECT SITE. CONTRACTOR SHALL BE SOLELY RESPONSIBLE FOR ALL EROSION AND SEDIMENTATION CONTROL MEASURE AT ANY OFF-SITE SPOIL AREAS. PLACE AND COMPACT MATERIAL IN AREAS OF FILL TO OBTAIN NECESSARY GRADES.
6. ROUGH GRADE SITE, STABILIZE AND SEED EXCESS STOCKPILE MATERIAL AS SHOWN ON THE EROSION AND SEDIMENTATION CONTROL PLAN SHEET. INSTALL SILT FENCE AROUND THE STOCKPILE IMMEDIATELY AFTER THE SOIL IS STOCKPILED.
7. THE SITE GRADING ACTIVITIES SHALL BE INITIATED AND PROCEED IN SUCH A MANNER AS TO DIRECT ALL STORM WATER FROM DISTURBED AREAS TO THE SEDIMENT CONTROL STRUCTURES.
8. STABILIZE ALL GRASS AREAS IN ACCORDANCE WITH THE SEEDING AND MULCHING SPECIFICATIONS.

STAGE 2 (CONSTRUCTION)

1. INITIATE CONSTRUCTION OF BUILDING FOUNDATION AND SUPER STRUCTURE.
2. INSTALL WASTEWATER AND WATER SUPPLY SYSTEMS INCLUDING PIPING AND TRENCHING AS SHOWN ON THE SITE PLAN.
3. ROUGH GRADE SITE, WORKING GRADE TOWARDS "ROUGH" FINAL GRADE ELEVATIONS OF PARKING LOT.
4. PLACE AND COMPACT SUBBASE IN AREAS TO BE PAVED AND PLACE THEGRAVEL / ITEM #4 COURSE AS SOON AS IT IS PRACTICAL.
5. CLEAN OUT & RESEED AND RE-STABILIZE INFILTRATION BASINS WHERE NECESSARY.
6. RESEED, RE-MULCH AND RE-STABILIZE WHERE NECESSARY.
7. REMOVE SILT FENCING ONLY AFTER ENTIRE SITE HAS BEEN STABILIZED, VEGETATED AREAS SHALL BE CONSIDERED PERMANENTLY STABILIZED WHEN A UNIFORM 70% VEGETATIVE COVER OF EROSION RESISTANT PERENNIAL SPECIFIED HAS BEEN ACHIEVED, OR THE DISTURBED AREA IS COVERED WITH AN ACCEPTABLE BMP WHICH PERMANENTLY MINIMIZE ACCELERATED EROSION AND SEDIMENTATION. UNTIL SUCH TIME AS THIS STANDARD IS ACHIEVED, INTERIM STABILIZATION MEASURES AND TEMPORARY EROSION AND SEDIMENT CONTROL BMPS THAT ARE USED TO TREAT PROJECT RUNOFF MAY NOT BE REMOVED. DURING PERIODS OF DROUGHT, IRRIGATION SHOULD BE UTILIZED UNTIL STABILIZATION HAS OCCURRED.

SEEDING AND MULCHING SPECIFICATIONS

TEMPORARY STABILIZATION:

	TYPE	RATE
SEED	ANNUAL RYE GRASS	1 LB/1,000 SQ FT
MULCH	HAY	3.0 TONS/ACRE
LIME	AGRICULTURAL GRADE LIMESTONE	1.0 TONS/ACRE
FERTILIZER	10-20-10	50 LBS./ACRE

PERMANENT STABILIZATION:

	TYPE	RATE
SEED	PERENNIAL RYE GRASS (20%) REDTOP (50%) ORCHARD GRASS (30%)	0.45 LBS/1,000 SQ FT 0.35 LBS/1,000 SQ FT 1.4 LBS/1,000 SQ FT
MULCH	HAY	3.0 TONS/ACRE
LIME	AGRICULTURAL GRADE LIMESTONE	6.0 TONS/ACRE
FERTILIZER	10-20-10	1,000 LBS./ACRE

TOWN OF CHESTER
PLANNING BOARD APPROVAL

Dig Safely. New York
Call 811
before you dig

THIS PLAN CONTAINS 12 SHEETS. THIS SHEET SHALL NOT BE CONSIDERED VALID UNLESS ACCOMPANIED BY THE REMAINING SHEETS.

UNAUTHORIZED ALTERATION OR ADDITIONS TO A PLAN BEARING THE SEAL OF A LICENSED ENGINEER OR LAND SURVEYOR IS A VIOLATION OF SECTION 7209 SUBDIVISION 2 OF THE NEW YORK STATE EDUCATION LAW.

COPIES OF THIS DOCUMENT WITHOUT A FACSIMILE OF THE SIGNATURE AND AN ORIGINAL EMBOSSED SEAL OR ORIGINAL STAMP OF THE PROFESSIONAL ENGINEER OR LAND SURVEYOR SHALL NOT BE CONSIDERED VALID COPIES.

REVISIONS

DWN BY	REV	DESCRIPTION	DATE	APPROVED
DO	0	FOR APPROVAL	08/10/22	
DO	1	REVISED PER TOWN COMMENT	11/23/22	
DO	2	REVISED PER TOWN COMMENT	02/15/23	
DO	3	REVISED LIGHTING PLAN	03/29/23	

JOHN D. FULLER
REG. NO. 077703

JOHN D. FULLER, P.E., P.C.
4 SOUTH STREET
PORT JERVIS, NY 12771
(845) 856-1536

SITE PLAN FOR
TRADE TRANS CORPORATION
173 BLACK MEADOW ROAD
SECTION 6 BLOCK 1 LOT 106
TOWN OF CHESTER, NY

DWG TITLE: EROSION & SEDIMENTATION CONTROL PLAN DETAILS
DWG NO. S-9
SCALE: AS NOTED
JOB NO. 1713.003

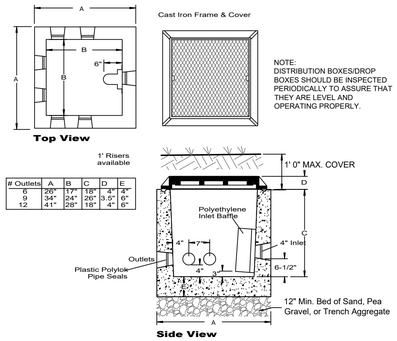

# Outlets	A	B	C	D	E
6	28"	17"	18"	4"	4"
9	34"	24"	26"	3.5"	6"
12	41"	28"	18"	4"	6"

SPECIFICATIONS	PRECAST TRAFFIC RATED DISTRIBUTION BOXES
Concrete Min. Strength: 4,000 psi at 28 days Reinforcement: #4 Rebar / ASTM A615 Air Entrainment: 6% Pipe Connection: Polylok Seal Weights: 550 lb / 1,300 lb / 2,000 lb Load Rating: H20-44 + 30% / ASTM C857	**Woodard's Concrete Products, Inc.** 629 Lybolt Road, Bullville, NY 10915 (845) 361-3471 / Fax 361-1050

PRECAST TRAFFIC RATED DISTRIBUTION BOX DETAIL

1 / S-10

SCALE: N.T.S.

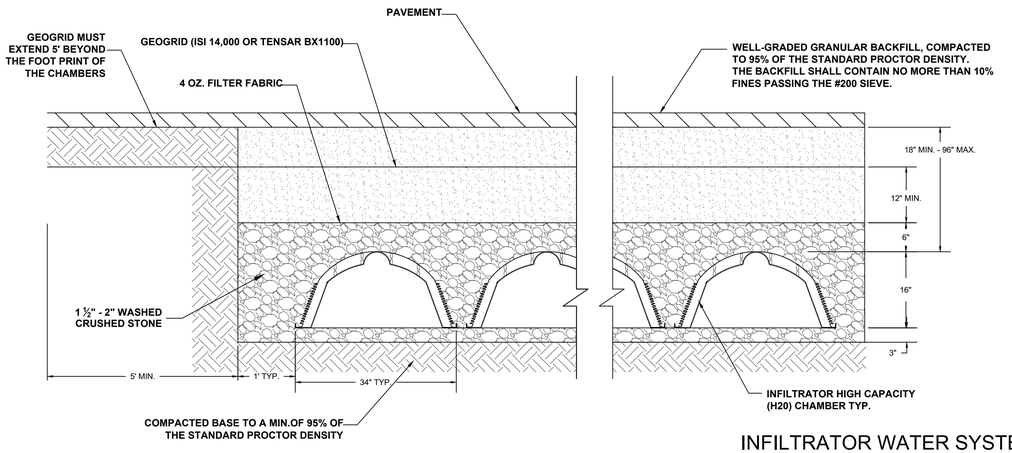

INFILTRATOR WATER SYSTEMS HIGH CAPACITY (H20) CHAMBER TRENCH DETAIL

4 / S-10

SCALE: N.T.S.

MINIMUM SEPARATION DISTANCE (FEET) FROM

	WELL (f) OR SUCTION LINE	TO STREAM, LAKE, WATERCOURSE, WETLAND OR WET POND (b)	DWELLING	PROPERTY LINE	DRAINAGE DITCH (b) (g)	
HOUSE SEWER (WATERTIGHT JOINTS)	25' IF C.I. OR PVC W/ O-RING JOINTS, 50' OTHERWISE	25'	3'	10'	---	
SEPTIC TANK	50'	50'	10'	10'	10'	
EFFLUENT LINE TO DIST. BOX	50'	50'	10'	10'	10'	
DISTRIBUTION BOX	100'	100'	20'	10'	50'	
SEEPAGE PIT	150' (a)	100'	20'	10'	50'	
DRY WELL (ROOF AND FOOTING)	50'	25'	20'	10'	50'	
RAISED OR MOUND SYSTEM (c)	100'(a)	100'	20'	10'	50'	
INTERMITTEN SAND FILTER (c)	100' (a)	100'	20'	10'	50'	
EVAPOTRANSPIRATION ABSORPTION SYSTEM (c)	100' (a)	50'	20'	10'	50'	
COMPOSTER	50'	50'	20'	10'	10'	
SANITARY PRIVY PIT	100'	50'	20'	10'	20'	SUBDIVISION BOUNDARY
PRIVY, WATERTIGHT VAULT	50'	50'	20'	10'	10'	50'
WELL		25'				
ABSORPTION FIELD	100'(a)	100'	20'	10'	50'	TO INTERMITTENT STREAM, DRY WELL,CULVERT STORM SEWER (NON-GASKETED PIPE) OR CATCH BASIN

ABSORPTION FIELD (CON'T.)	CULVERT OR STORM SEWER (GASKETED, TIGHT PIPE)	CURTAIN DRAIN	TOP OF EMBANKMENT OR STEEP SLOPE (1 ON 3)	SOLID CURTAIN DRAIN, ROOF OR FOOTING PIPES, SNOW STORAGE EASEMENT	
	35'	15'	25'	10'	50'

(a) WHEN SEWAGE TREATMENT SYSTEMS ARE LOCATED IN COARSE GRAVEL OR UPGRADE AND IN THE GENERAL PATH OF DRAINAGE TO A WELL, THE CLOSEST PART OF THE TREATMENT SYSTEM SHALL BE AT LEAST 200' AWAY FROM THE WELL.
(b) MEAN HIGH WATER MARK
(c) FOR ALL SYSTEMS INVOLVING THE PLACEMENT OF FILL MATERIAL, SEPARATION DISTANCES ARE MEASURED FROM THE TOE OF SLOPE OF THE FILL.
(d) ANY WATER SERVICE LINE UNDER PRESSURE (i.e., PUBLIC WATER SUPPLY MAIN, HOUSEHOLD SERVICE LINE, WELL TO HOUSEHOLD SERVICE LINE) LOCATED WITHIN TEN FEET OF ANY ABSORPTION FIELD, SEEPAGE PIT OR SANITARY PRIVY SHALL BE INSTALLED INSIDE A LARGER DIAMETER WATER MAIN TO PROTECT THE POTABLE WATER SUPPLY.
(e) ANY WATER SERVICE LINE UNDER PRESSURE (i.e., PUBLIC WATER SUPPLY MAIN, HOUSEHOLD SERVICE LINE, WELL TO HOUSEHOLD SERVICE LINE) CROSSING A SEWER SHALL BE INSTALLED WITH ONE FULL LENGTH OF WATER MAIN CENTERED ABOVE THE SEWER SO BOTH WATER CONNECTING JOINTS ARE AS FAR AS POSSIBLE FROM THE SEWER. SECTION 8.6 OF THE GLUMRB RECOMMENDED STANDARDS FOR WATER WORKS, SHALL BE FOLLOWED FOR SEPARATION OF WATER MAINS, SANITARY SEWERS AND STORM SEWERS.
(f) THE MINIMUM SEPARATION DISTANCE BETWEEN A SEPTIC TANK AND A COMMUNITY TYPE PUBLIC WATER SUPPLY WELL SHOULD BE 100'. DISTRIBUTION BOXES AND ABSORPTION FACILITIES (e.g., ABSORPTION TRENCHES/BEDS, SEEPAGE PITS, RAISED SYSTEMS, MOUND SYSTEMS, ETC.) SHOULD BE LOCATED AT LEAST 200' FROM COMMUNITY TYPE PUBLIC WATER SUPPLY WELLS.
(g) RECOMMENDED SEPARATION DISTANCES.

MINIMUM SEPTIC TANK CAPACITIES

MINIMUM SEPTIC TANK CAPACITY = 1.5 TIMES THE DESIGN FLOW RATE
1.5 X 315 GPD = 472.5 GALLONS
1,250 GALLONS PROVIDED

SEPTIC CALCULATIONS

DESIGN FLOW = 21 EMPLOYEES @ 15 GPD PER EMPLOYEE = 315 GPD
PERCOLATION RATE: 45-60 MIN.

TRENCH LENGTH REQUIRED = 315 GPD/0.45/2 = 350 L.F.

6 ROWS PROVIDED @ 60 = 360 L.F.

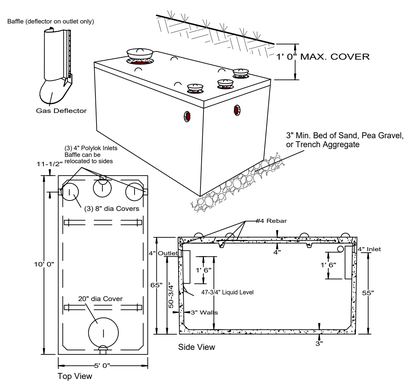

SPECIFICATIONS	PRECAST SEPTIC TANKS MODEL ST-1250 / 1250 GALLONS
Concrete Min. Strength: 4,000 psi at 28 days Reinforcement: #4 Rebar, 6x6x10ga. WWM Air Entrainment: 5% Construction Joint: Butyl Rubber Sealant Pipe Connection: Polylok Seal (patented) Weight = 9,500 lbs Load Rating: 300 psf	Woodard's Concrete Products, Inc. 629 Lybolt Road, Bullville, NY 10915 (845) 361-3471 / Fax 361-1050

PRECAST CONCRETE SEPTIC TANK

2 / S-10

SCALE: N.T.S.

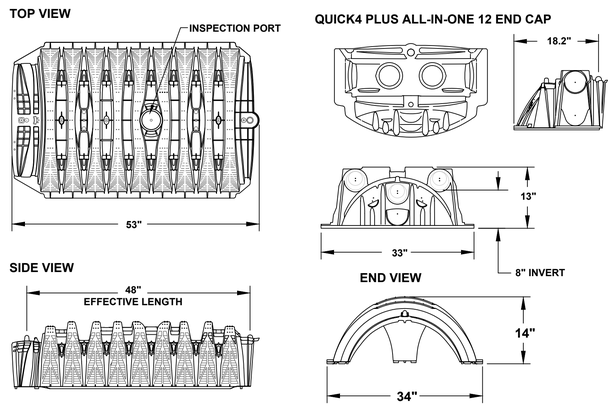

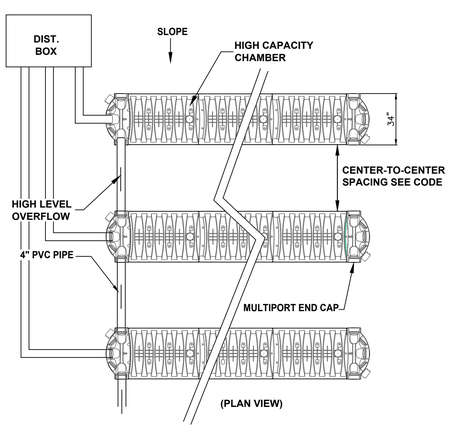

NOTES:
1. ALL LATERALS IN USE SHALL BE EQUIPPED WITH A FLOW LEVELER.
2. FLOW LEVELERS SHALL NOT COMPENSATE FOR MORE THAN 1 1/4" DIFFERENCE IN LATERAL INVERT ELEVATIONS. THE DISTRIBUTION BOX SHALL BE RELEVELED AND THE FLOW LEVELERS READJUSTED.
3. THE DISTRIBUTION BOX SHALL BE CHECKED 6-12 MONTHS AFTER INSTALLATION AND THE FLOW LEVELERS SHALL BE READJUSTED IF NECESSARY.

FLOW LEVELER

3 / S-10

SCALE: N.T.S.

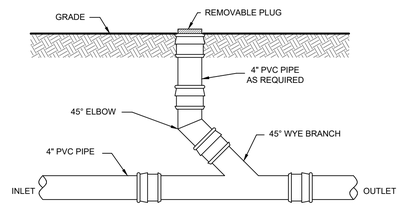

TYPICAL CLEANOUT DETAIL

5 / S-10

SCALE: N.T.S.

THIS PLAN CONTAINS 12 SHEETS. THIS SHEET SHALL NOT BE CONSIDERED VALID UNLESS ACCOMPANIED BY THE REMAINING SHEETS.

Dig Safely. New York Call 811 before you dig

TOWN OF CHESTER
PLANNING BOARD APPROVAL

UNAUTHORIZED ALTERATION OR ADDITIONS TO A PLAN BEARING THE SEAL OF A LICENSED ENGINEER OR LAND SURVEYOR IS A VIOLATION OF SECTION 7209 SUBDIVISION 2 OF THE NEW YORK STATE EDUCATION LAW.

COPIES OF THIS DOCUMENT WITHOUT A FACSIMILE OF THE SIGNATURE AND AN ORIGINAL EMBOSSED SEAL OR ORIGINAL STAMP OF THE PROFESSIONAL ENGINEER OR LAND SURVEYOR SHALL NOT BE CONSIDERED VALID COPIES.

REVISIONS

DWN BY	REV	DESCRIPTION	DATE	APPROVED
DO	0	FOR APPROVAL	08/10/22	
DO	1	REVISED PER TOWN COMMENT	11/23/22	
DO	2	REVISED PER TOWN COMMENT	02/15/23	
DO	3	REVISED LIGHTING PLAN	03/29/23	

JOHN D. FULLER
REG. NO. 077703

JOHN D. FULLER, P.E., P.C.
4 SOUTH STREET
PORT JERVIS, NY 12771
(845) 856-1536

SITE PLAN FOR
TRADE TRANS CORPORATION
173 BLACK MEADOW ROAD
SECTION 6 BLOCK 1 LOT 106
TOWN OF CHESTER, NY

DWG TITLE: SEPTIC DETAILS
DWG NO. S-10
SCALE: AS NOTED
JOB NO. 1713.003

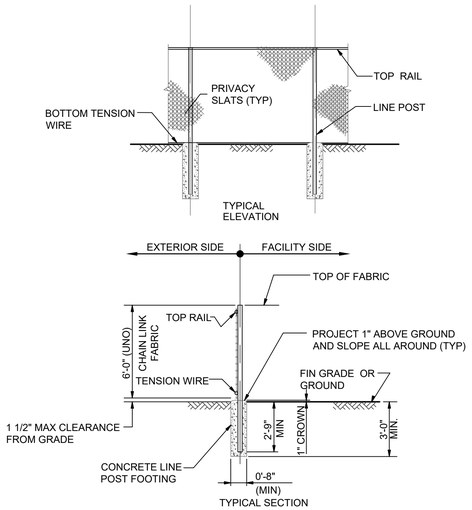

TYPICAL CHAIN LINK FENCE DETAIL

1 / S-11

SCALE: N. T. S.

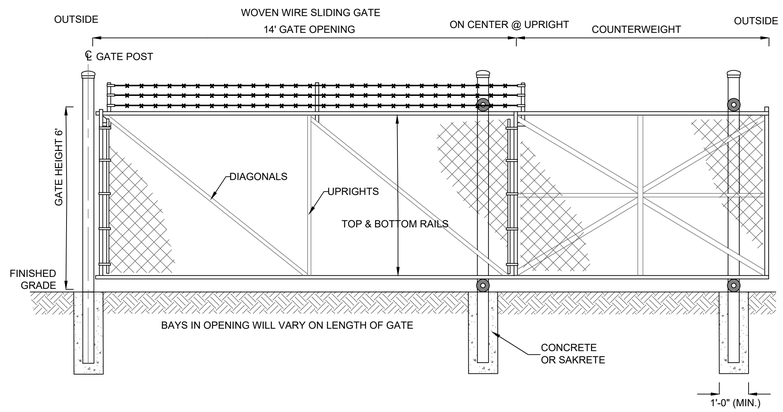

CHAIN LINK SLIDING GATE DETAIL

2 / S-11

SCALE: NONE

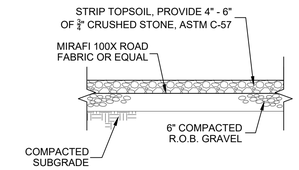

GRAVEL PARKING DETAIL

3 / S-11

SCALE: N. T. S.

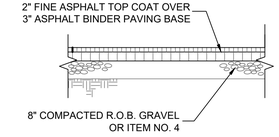

SITE PAVING DETAIL

4 / S-11

SCALE: N. T. S.

TYPICAL WOVEN WIRE FENCING NOTES

(INSTALL FENCING PER ASTM F-567)

1. LINE POST: 2-3/8"Ø SCHEDULE 40 PIPE PER ASTM-F1083.
2. TOP RAIL & BRACE RAIL: 1 1/4"Ø SCHEDULE 40 PIPE PER ASTM-F1083.
3. FABRIC: 11 GA. CORE WIRE SIZE 2" MESH, CONFORMING TO ASTM-A392 CLASS 1.
4. TIE WIRE: MINIMUM 11 GA GALVANIZED STEEL INSTALL A SINGLE WRAP TIE WIRE AT POSTS AND RAILS AT MAX. 24" INTERVALS. INSTALL HOG RINGS ON TENSION WIRE AT 24" INTERVALS.
5. TENSION WIRE: 7 GA. GALVANIZED STEEL.
6. HEIGHT = 4' VERTICAL.
7. LINE POSTS ARE 5' O.C. NOMINAL AND NOT TO EXCEED 10'
8. ALL WORK SHALL CONFORM WITH THE PROJECT SPECIFICATIONS.

TOWN OF CHESTER
PLANNING BOARD APPROVAL

THIS PLAN CONTAINS 12 SHEETS. THIS SHEET SHALL NOT BE CONSIDERED VALID UNLESS ACCOMPANIED BY THE REMAINING SHEETS.

UNAUTHORIZED ALTERATION OR ADDITIONS TO A PLAN BEARING THE SEAL OF A LICENSED ENGINEER OR LAND SURVEYOR IS A VIOLATION OF SECTION 7209 SUBDIVISION 2 OF THE NEW YORK STATE EDUCATION LAW.

COPIES OF THIS DOCUMENT WITHOUT A FACSIMILE OF THE SIGNATURE AND AN ORIGINAL EMBOSSED SEAL OR ORIGINAL STAMP OF THE PROFESSIONAL ENGINEER OR LAND SURVEYOR SHALL NOT BE CONSIDERED VALID COPIES.

REVISIONS

DWN BY	REV	DESCRIPTION	DATE	APPROVED
DO	0	FOR APPROVAL	08/10/22	
DO	1	REVISED PER TOWN COMMENT	11/23/22	
DO	2	REVISED PER TOWN COMMENT	02/15/23	
DO	3	REVISED LIGHTING PLAN	03/29/23	

JOHN D. FULLER
REG. NO. 077703

JOHN D. FULLER, P.E., P.C.
4 SOUTH STREET
PORT JERVIS, NY 12771
(845) 856-1536

SITE PLAN FOR
TRADE TRANS CORPORATION
173 BLACK MEADOW ROAD
SECTION 6 BLOCK 1 LOT 106
TOWN OF CHESTER, NY

DWG TITLE: CONSTRUCTION DETAILS
DWG NO. S-11
SCALE: AS NOTED
JOB NO. 1713.003